Book Price $24.95

BUILD YOUR OWN SPECTRUM ANALYZER

FROM SCIENCE WORKSHOP, HOME OF THE "POOR MAN'S" SPECTRUM ANALYZER

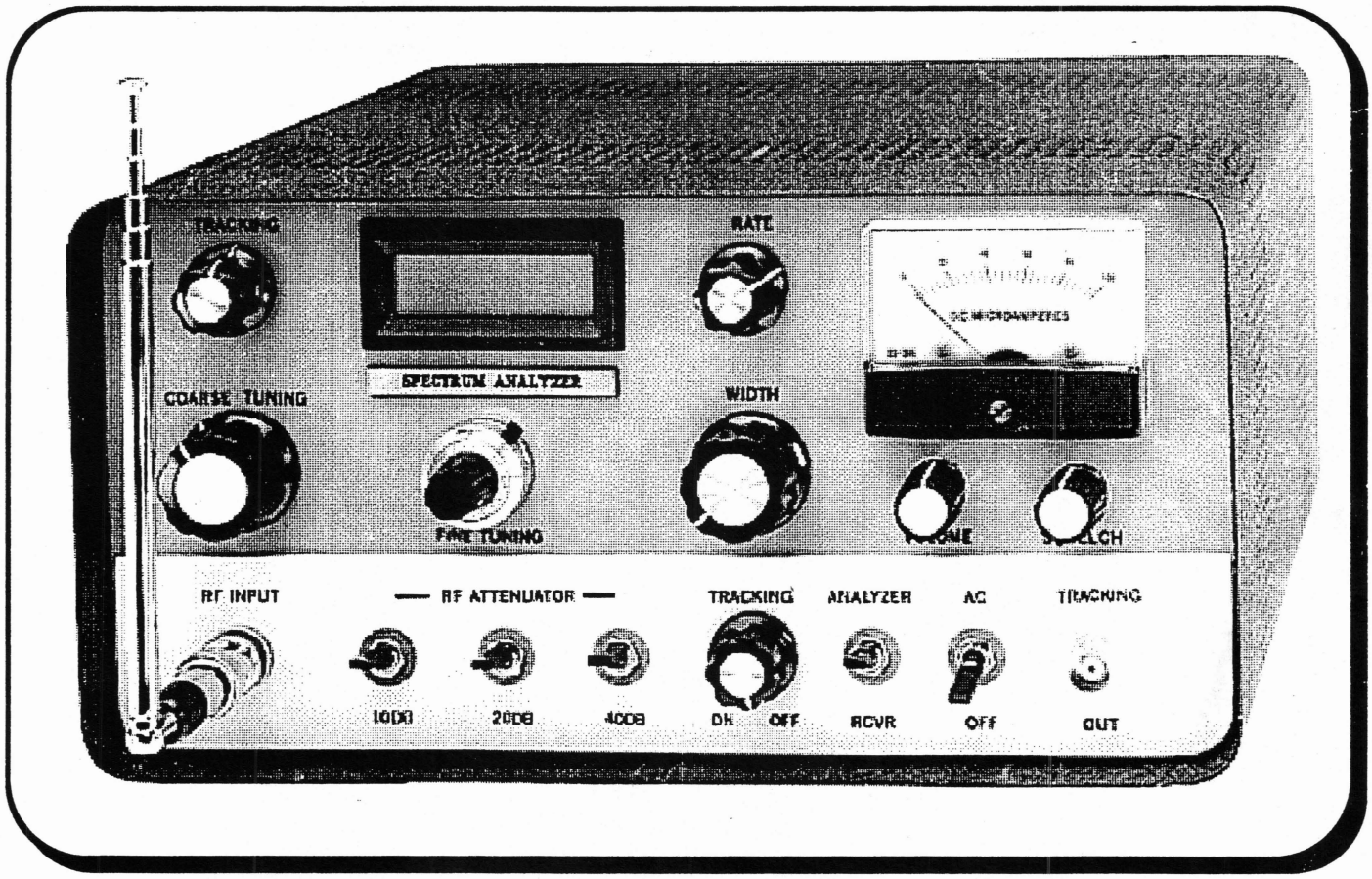

Murray (WA2PZO) & Bruce (WA2DRO) Barlowe

Magazine article reprints.
Theory of operation.
Layout drawings & photos.
User's modifications.
More circuits.
Full documentation.

Build Your Own Spectrum Analyzer

Murray & Bruce Barlowe

Published by-
Science Workshop
Box 310
Bethpage, NY 11714
(516) 731-7628

Copyright (c) 1992 by Murray Barlowe.
All rights reserved.

CONTENTS

1. Introduction

Who this book is for. What is the "Poor Man's Spectrum Analyzer"? Why we wrote the book. Acknowledgements. **1-1**

2. Tutorial

What you always wanted to know but didn't know who to ask. Spectrum Analyzer basics, Sidebands and some Myths. **2-1**

3. Magazine Articles

Low cost spectrum analyzer with kilobuck features. **3-1**
Richard M. Richardson, W4UCH, Ham Radio, Sept. 1986
Comparison of S-Meter Scale with dBm and uV. **3-7**
Bill Good, W2CVI
Building the "Poor Man's Spectrum Analyzer". **3-8**
Joe Carr, K4IPV, Ham Radio, March 1987
Revisiting the "Poor Man's Spectrum Analyzer". **3-12**
Joe Carr, K4IPV, Ham Radio, Sept. 1987
Add a digital readout to the "Poor Man's Spectrum Analyzer". **3-16**
Murray Barlowe, WA2PZO, Ham Radio, Sept. 1986
Interface your computer to the "Poor Man's Spectrum Analyzer". **3-24**
Allen Wooten, WD4EUI, Communications Quarterly, Nov. 1990
The "Poor Man's Spectrum Analyzer". A Review. **3-37**
Steven Guerra WB5LCN, "Skywave" Club newspaper

4. User Feedback

Build a LED DVM for center frequency display. Using relays to switch filters. Packaging the Spectrum Analyzer. **4-1**
Terry Porter, WA2AVC
Adding a marker, packaging the Analyzer and comments. **4-8**
Richard Valites, NY3P
Modifications and packaging. Using the Tracking Generator to align duplexers. A cassette tape recorder as a "magnetic storage unit"? **4-19**
Terry Nixon, WB0VQP
Modifications to linearize the sweep. **4-26**
Mike Sharki, KB7TG

CONTENTS (cont'd.)

Converting a Sony Video Monitor into a X-Y Display. Digitally Controlled Ramp Generator. **4-31**
Don Morar, W3QVZ
Tuning and using the Tracking Generator. **4-48**
Charles Kembering,
Packaging and schematics. **4-50**
Jerry Lefebvre, W1SEP
Using a Noise Bridge with the analyzer converts it into a Network Analyzer for antenna work. **4-54**
Terry Good, WB2PFB
Add a Comb Generator for 10MHz markers. **4-62**
Talmadge Huckabee, WB4KDY
Designing a Digital Center Frequency Readout circuit and Linearizing the Sweep. **4-63**
Lloyd Hanson, W9YCB
Adding AFC (Automatic Frequency Control). **4-73**
Dave Riley, AA1A/MM
Using Frequency Crystals as Crystal Filters. **4-75**
John Gebuhr, WB0CMC
Using the spectrum analyzer for NMR/MRI alignment. **4-78**
Wade Holcomb, W1GHU
More on linearizing the sweep. **4-80**
George Hoffmanner, N3ESO
Packaging, modifications and still more on linearizing the sweep. **4-82**
D.P. Rathke
Modifications to the Ramp Generator and the Digital Frequency Readout circuit. **4-86**
Henry Wells, W1TNE
Using a frequency counter to adjust the Digital Frequency Readout circuit. **4-90**
Steven Guerra, WB5LCN
Modifications, applications and packaging. **4-91**
Hugh Wells, W6WTU
Ramp Generator Circuit Modification, Packaging and Spectral Purity Plots of the output of the Tracking Generator. **4-96**
Bob Yereb, W8MIG
Modifying the Digital Readout Interface Board. **4-102**
Charles Powell, N5LMS
Overseas User sends us photos on how he packaged his unit. **4-104**
Edward Ross, 5B4OG (Cyprus)

CONTENTS (cont'd.)

Overall Wiring Diagram and Packaging **4-106**
Ronald Rees, R^2 Industries
Ramp Board changes, plus a clever scheme to monitor activity on specific frequencies. **4-114**
Richard Kennedy, WA5QCP

5. Instruction Sheets

Main Board, SW-6006. **5-1**

Ramp Board, SW-6001. **5-8**

0-500MHz Tuner, SW5800. **5-9**

450-900 MHz Tuner, SW-5810. **5-10**

940-1460 MHz Tuner, SW-5820. **5-13**

Tracking Generator, SW-5900. **5-15**

Digital Freq. Readout Interface. SW-6007. **5-20**

Power Supply, SW-PS1. **5-24**

Switched Filter, SW-6010. **5-27**

Marker/Signal Generator, MSG-100. **5-31**

CHAPTER ONE

Introduction

Who this book is for.

What is the "Poor Man's Spectrum Analyzer"?

Why we wrote the book.

Acknowledgements.

INTRODUCTION

WHO THIS BOOK IS FOR

If you have never used a Spectrum Analyzer, this book will give you some insight into what it is and what it can do. If you have used one before, this book will show you how you can own one for a fraction of what it would cost to buy one. For those who already own one of our "Poor Man's Spectrum Analyzers", it will "show & tell" what others like you have accomplished, how you can improve and expand it's power.

SALES PITCH (From our flyer, if you haven't seen it before.)

Imagine if you will, a single piece of equipment that could provide you with the ability to be able to: *Check your transmitter output for "spurs". *See if the band is "open" at a glance, or find a quiet spot on the band. *Monitor ALL the local repeaters SIMULTANEOUSLY! *Receive "on-carrier" or "sub-carrier" ATV sound. *Examine Satellite TV signals and their sub-carriers. (Curious about those "secret" signals on the Cable?) *Measure the amplitude and frequency of RFI generated by your computer, electrical appliances, etc. and instantly evaluate the results of filtering or shielding. *Orient and tune antennas (and antenna tuners) for maximum results across a band of frequencies. *Sweep an area for illegal "bugs". *Identify modulation modes such as AM, FM, SSB, FSK, PCM etc. *Signal trace transmitters and receivers, check "gain-per-stage" when building or troubleshooting and test for harmonic or intermodulation distortion. *Tune antenna duplexers or diplexers, make VSWR measurements, measure insertion loss and tune RF filters. *Make field strength measurements. *Act as a continuous-tuning AM/FM, UHF/VHF sound receiver.

These are only a few of the applications for the New Science Workshop Spectrum Analyzer/Receiver. With "RF-Vision" you will have a new monitoring mode, with rapid signal detection, modulation analysis and band condition and activity information constantly available at your finger tips! Through it's many applications, this new instrument provides information and operating techniques not available in any other way.

SOME HISTORY.

Back in 1978, I assembled a few pieces of surplus electronic gear into what I affectionately called "The Poor Man's Spectrum Analyzer". I demonstrated it at the Dayton Hamfest, and sold out on the first day. One of the key items was a surplus TV IF strip which I had narrowbanded for this application. I found a few more, sold out again and then we were out of the Spectrum Analyzer business! The excitement created by this extremely low-cost approach to spectrum analysis and display inspired me to see if I could design a simple circuit that could do all that the original package did, and maybe a bit more.

The new design is simpler, more stable, and has greater dynamic range. How could we do all this and still come up with a package that meets the economical goal of being called the "Poor Mans's Spectrum Analyzer"? Simple. Careful compromise! We would all love to have an instrument which would have all of the features of the $30,000 machine-- or even settle for the features and accuracy of the $5,000 machine. But we also realize that it's not in the cards for under $100. How about a machine that would do ALMOST everything the professional models do, but one that would require a little more effort and ingenuity on our part when it came to making precise measurements?

INTRODUCTION

Isn't half a loaf better than none? Many times it is, and I believe this is one of those times. The original kit was based on these assumptions, and we made lots of friends with it! The results, both in performance and educational value, are impressive. Once you've had the opportunity to use it and appreciate it's potential, you will probably find applications that we haven't even dreamed of!

HOW DOES IT WORK?

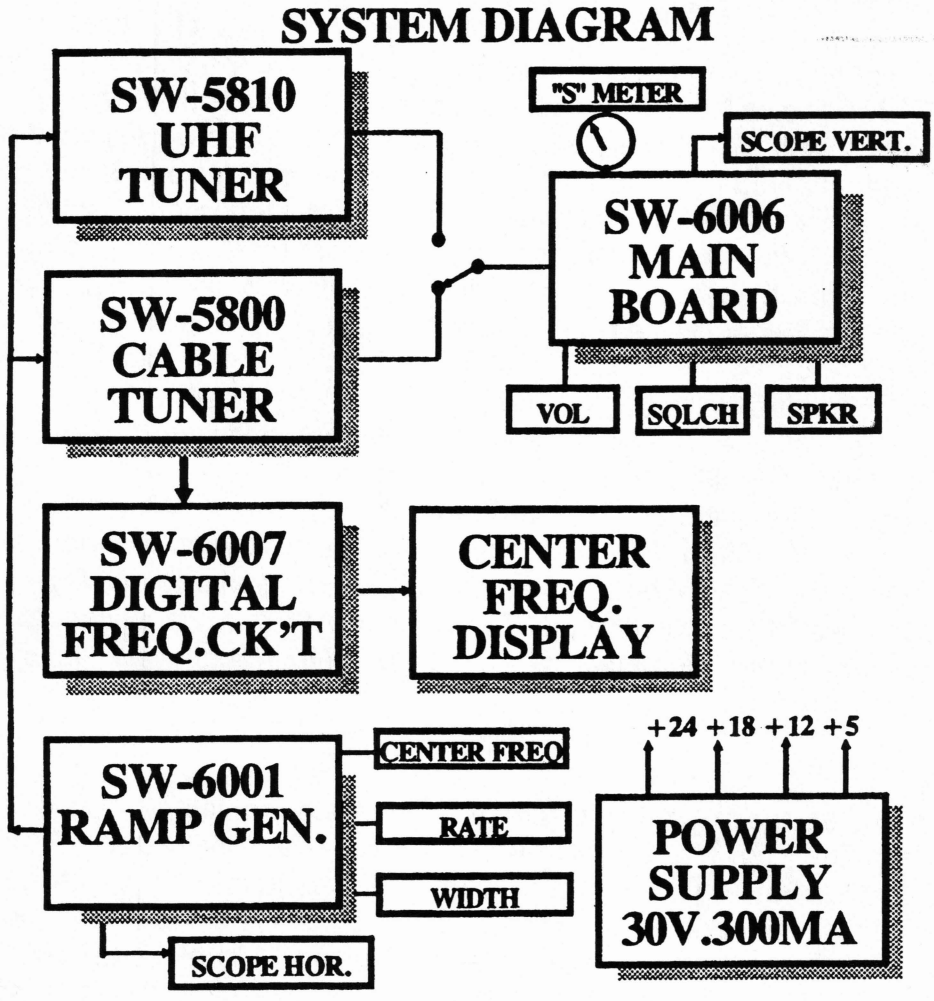

Basically, the "Poor Man's Spectrum Analyzer" sweeps a voltage-tuned front-end over a range of frequencies in synchronism with the horizontal sweep of a scope. The received signal is passed through a narrow band filter and the detected signal is applied to the vertical amplifier of the scope. No signal, no vertical deflection. The deflection produced by the signal is proportional to the received signal's strength. Resolution is approximately 250 KHz (or 15KHz with the switched filter upgrade), which is determined by the bandwidth of the filter.

Since the output of the analyzer is audio, you can use ANY SCOPE for the display! If you don't have one, pick up the cheapest "flea market special" that produces

WHAT CAN I SEE (AND HEAR) WITH SCIENCE WORKSHOP'S SPECTRUM ANALYZER/MONITOR RECEIVER?

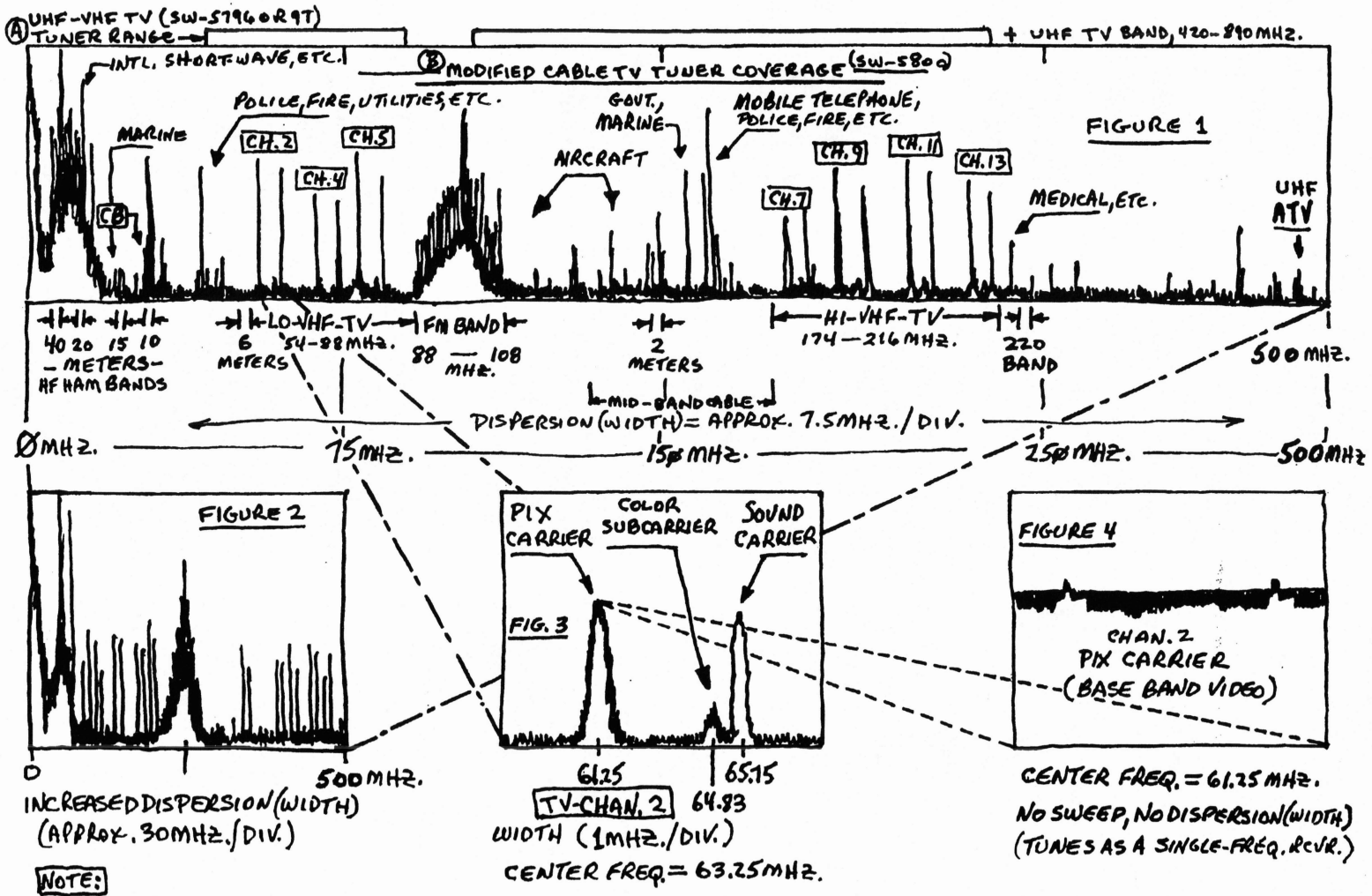

NOTE:

(A) ILLUSTRATES COVERAGE WITH SW-5796 OR 97 TUNER. (B) ILLUSTRATES COVERAGE WITH SW-5800 CABLE TV TUNER.

* VIEWED WITH ANTENNA IN BETHPAGE, N.Y.

INTRODUCTION

a horizontal line! The analyzer functions as a TUNABLE RF VOLTMETER with "eyes" and "ears". This makes it a natural for signal tracing receivers and transmitters, making relative gain-per-stage measurements, tuning transmitters, receivers, antennas and duplexers, locating and identifying sources of RFI, checking receiver local oscillator radiation, transmitter spurs, remote off-the-air repeater transmitter monitoring, etc. Using the analyzer on a transmitter, provides a display of the frequency, amplitude, and purity of the oscillator, frequency multiplier, and final signals. While a wattmeter indicates the total power output of a transmitter, the analyzer will tell you how much of that power is the desired output signal and how much of it is "garbage". Have you ever "peaked-up" on a spur? How would you know? Wouldn't you like to see the level of the synthesizer sidebands? The harmonics?

The high sensitivity of the instrument permits signal tracing receiver circuits from the antenna through the low-level RF stages. If the output of an RF amplifier stage contains signals not visible on the input, the RF stage is generating distortion products as a result of either overload, incorrect bias, etc. A conventional RF voltmeter (or scope) simply sums all of the voltages with no indication of the individual frequency components. Not so with the Spectrum Analyzer! In addition, the analyzer displays the presence of the local oscillator signal, as well as it's frequency and injection level.

The Science Workshop "Poor Man's Spectrum Analyzer/Receiver" may not provide you with the built-in calibration convenience of it's bigger brothers, but it will provide you with a basic instrument that will teach you how a Spectrum Analyzer works, do all the good things we've described, provide you with a continuous tuning AM/FM, UHF/VHF sound receiver and best of all- it's price GUARANTEES NOT to make YOU a "POOR MAN"!

The "Poor Man's Spectrum Analyzer/Receiver has been designed and packaged as a semi-kit to provide the cost-concious Ham/Experimenter the opportunity to assemble his unit at the lowest possible cost. The heart of the instrument is what we call the "Main Board Assembly". It contains the converter, IF filter, amplifier/detector and audio amplifier sections. All on a 3" X 4 l/2" PC board.

WHAT ELSE DO I NEED?

A sawtooth horizontal sweep voltage is required to deflect the beam horizontally across the screen of the scope, and at the same time, cause the varactor tuner to scan across the RF band. Many scopes provide access to the internal horizontal sawtooth voltage. If your scope does, that's all you need. Our instructions show you how to use it. If your scope doesn't, we've provided another kit which uses a single LM-3900 chip to do the job. It also provides a voltage regulator and the circuitry necessary to integrate the controls for "width", "sweep rate" and "center frequency". Makes it a lot easier to assemble your analyzer even if your scope provides the horizontal sweep voltage. To finish the project, you will have to provide a box, controls, knobs, speaker and power supply.

NOW, ZERO TO 500 MHZ IN ONE CONTINUOUS SWEEP!!!

We have acquired a quantity of NEW cable tuners (with pre- scalers) which we have modified for our application. They now provide continuous tuning from approximately 0 to 500 MHZ. The drawing on page 3 illustrates what we see (and

INTRODUCTION

hear) when we connect this tuner to an antenna here in Bethpage. Adding a UHF tuner gives us the ability to tune from approximately 0 to 900 MHz! Adding a third Super UHF tuner extends the range to approximately 1.5 GHz! Since the resolution of the analyzer is approximately 250 KHZ, it is difficult to resolve signals at the low end. It should be possible to improve this with crystal filters. The pre-scalers make it possible to add additional circuits to provide a direct, digital read out of the center frequency.

SW-5900 TRACKING GENERATOR

The addition of a tracking generator to the spectrum analyzer provides a powerful receiver system for stimulus-response measurements. A tracking generator is a signal source whose RF output follows (tracks) the tuning of the spectrum analyzer. Since the instantaneous output frequency of the SW- 5900 matches the instantaneous input frequency of the analyzer, this swept frequency test system acts as a very sensitive synchronous detector. This makes it the ideal set- up for measuring the frequency response of active and passive devices such as amplifiers, mixers, couplers, attenuators, transmission lines, and even antennas when used with an external bridge. It's output signal is generated by mixing two or more oscillators. Physically, the tracking generator consists of another modified cable tuner, designed to operate in conjunction with the SW-5800 modified cable tuner.

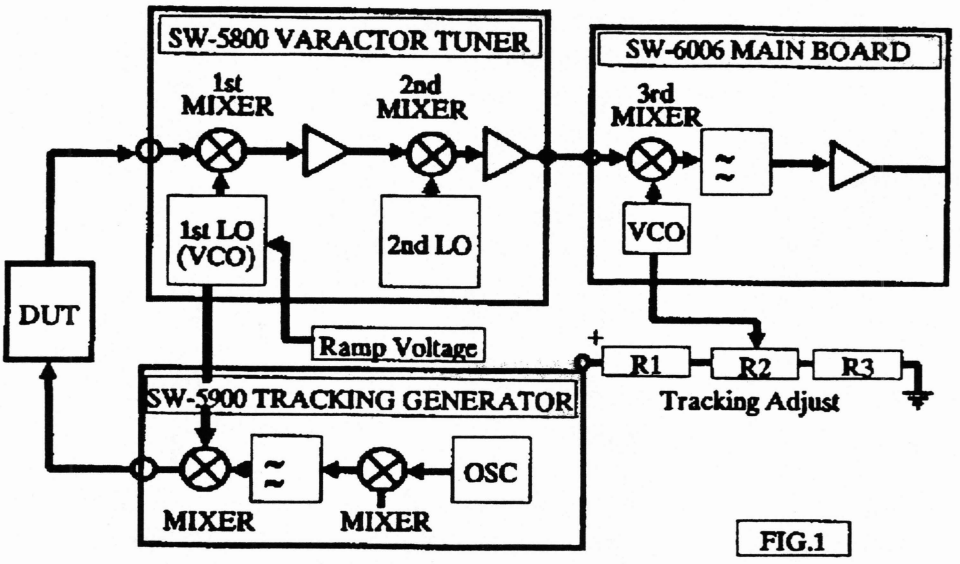

FIG.1

Figure 1 is a simplified block diagram of the system. The incoming signal to the spectrum analyzer mixes with the LO, and when the mixing product equals the IF, this signal passes through to the detector. The detector output is amplified and produces a vertical deflection on the CRT display. The sweep (ramp) generator drives the horizontal CRT deflection and tunes the LO. The tracking generator uses the swept LO from the spectrum analyzer and mixes that LO with a fixed IF oscillator. The sweep of the two instruments are matched and synchronous, and precise tracking between the two is assured.

INTRODUCTION

TYPICAL APPLICATION... The RF output from the tracking generator is connected to the input of the Device Under Test (DUT), and the output of the DUT is connected to the input of the spectrum analyzer, as in Figure 1. The resulting display is an instantaneous plot of the frequency response of the DUT. If you were adjusting a bandpass filter, you would immediately see the result of your tweaking. The tuned (sweeping) receive bandwidth of the analyzer assures that you are not peaking on a harmonic or any other spurious energy.

ANOTHER APPLICATION... Connect a piece of coax in place of the DUT (in parallel). Tune across the spectrum for a notch in the response curve. An open 1/4 wave line reflects a short, acting as a trap at the notch frequency. Clip 1/4" lengths from the open end and watch the notch move up in frequency! Terminate the open end with different values of resistance until the notch disappears. The value of resistance represents the characteristic impedance of the line at that frequency. Connect the transmission line from your antenna in it's place. You may be in for a surprise! The SW-5900 Tracking Generator is NOT a kit. It is a fully assembled and tested module, ready to be installed.

CENTER FREQUENCY READOUT CIRCUIT KIT FOR THE "POOR MAN'S SPECTRUM ANALYZER"

This KIT (Feature article HAM RADIO MAG., Oct.'88) uses a unique combination of Analog and Digital circuitry to accomplish a relatively complex task. The conventional approach to this problem has always been purely digital, requiring anywhere from 10 to 20 digital chips. In keeping with the philosophy demonstrated by the design of the "Poor Man's Spectrum Analyzer", I felt that there had to be a simpler, more economical way. Since we are looking at a CRT display, covering anywhere from a few Mhz to several hundred, all we needed was a 3-digit readout that could display 0 to 500 MHz directly.

PREVIOUS SOLUTIONS... Most frequency read-out circuits use the local oscillator signal to generate the display. This signal is offset from the incoming RF signal by an amount equal to the IF frequency. A little arithmetic must be performed to either add or subtract the IF signal to get back to the received frequency. This has required the use of heterodyne oscillators, presettable counters, or to somehow play games with the time base to accomplish the same result. These methods provide a relatively inflexible solution.

A NEW APPROACH... Rather than using the conventional all digital circuit, I decided to use a Precision Frequency-to-Voltage converter IC, along with the output of the prescaler IC in the SW-5800 tuner. A bit of Analog Computer circuitry took care of the remaining math. Although this circuit was designed to work with the SW- 5800 tuner, it provides experimenters with a simple low cost solution for directly displaying the received frequency of almost ANY receiver. A simple adjustment of a potentiometer is all that is required to accommodate any IF frequency from 0 to hundreds of MHz. For the first time, a TRULY UNIVERSAL DIRECT DIGITAL FREQUENCY READOUT!

DISPLAY OPTIONS...To keep cost's down, I designed the circuit so that it could use your Digital Voltmeter as the display. With the DVM set on the 20 volt scale, 0 to 500 MHz would be displayed as 0.00 to 5.00 volts. At first I found the decimal point annoying, but it didn't take too long before I was ignoring it. Later, when I found time, I

INTRODUCTION

bought a $29 DVM, disabled the decimal point and dedicated that meter to my Spectrum Analyzer. Now it reads DIRECTLY in MHz. However, we now have a Digital Panel Meter Module available that is ideal for this application. It measures approximately 1" x 2" x 0.5" and easily mounts into a rectangular front panel cut out. It is a State-of-the-Art, Surface Mount Technology LCD assembly, not a kit.

OTHER APPLICATIONS FOR THE SW-6007. There should be many other "frequency meter" applications for this unique circuit. Since this circuit could be used with ANY I.F., it represents a real breakthru. Adjusting the I.F. offset with the simple setting of a single control has been unheard of until now!

PC BOARD. The SW-6007 Kit is built up on a double-sided epoxy glass board, approximately 2" x 4.5", screened with the component parts layout. All parts and instructions are supplied. As usual, NO test equipment is required!

ADD 2 CHOICES OF RESOLUTION, SWITCHED FROM THE FRONT PANEL. Upgrade your Main Board to provide 250 or 15KHZ resolution, switchable from the front panel. The SW-6010 Switched Filter add-on board increases the selectivity, improving the ability to separate closely spaced signals.

POWER SUPPLY KIT. The SW-PS1 Power Supply Board includes an etched, screened and drilled epoxy glass PC board and all the diodes, regulators, filter capacitors, etc. to power all of the modules of the analyzer. It is designed to use Radio Shack's #273-1366 (not included) power transformer.

"SUPER" HI-FREQUENCY UHF VARACTOR TUNER. We have had many requests for tuners that could be used to further extend the range of the Analyzer. We now have a new unit that tunes from approximately 900MHz to 1.5GHz! Part number SW-5820.

END OF SALES PITCH

USER FEEDBACK, OR WHY WE WROTE THE BOOK

The list of schools, universities, major corporations, research laboratories, etc. to whom we have supplied kits reads like a "Who's Who" of the electronics industry, Many have used them as a "launch pad" for more sophisticated projects. I have first hand knowledge of a number of fine commercial products being marketed today that started life as the "Poor Man's Spectrum Analyzer". But, the majority of users are individuals, hobbyists and experimenters who have recognized the potential of these kits.

Over the years I have received feedback from users telling us what they liked and disliked about the project. They sent along photos of how they packaged their

units, schematics of modifications they made and performance measurements. The scope and depth of the many suggestions they sent illustrate the wealth of knowledge of our users. I've always felt that there was a lot of room for improvement, and the feedback confirms it. I've been accumulating this material, hoping to find the time to be able to evaluate and possibly incorporate some of the ideas into the "Poor Man's Spectrum Analyzer". Up until about a year or so ago, I was able to come up with additional "bells & whistles" such as the Tracking Generator, Digital Center Frequency Readout Kit, Switched Filter Upgrade, etc. on a more or less regular basis. Then I bought a 386 IBM clone computer! If it hasn't happened to you yet, let me warn you. BEWARE! It's addictive! First it was a data base for our mailing list, then schematic capture and PC board layout software, then word processing and now, desktop publishing. I thought computers were supposed to save time. I've lost at least 2 years enjoying my computer!

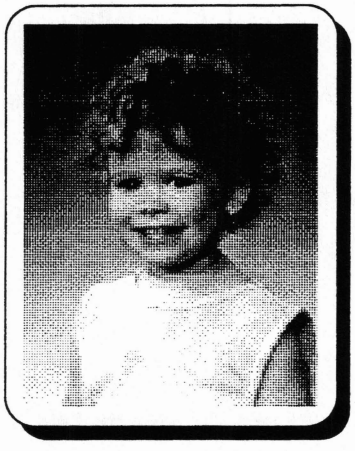

Oh yes, there was one other distraction. My first grandchild. Sara Rebecca Barlowe. Born April 24, 1989.

OK, back to work. Finally, I decided to put my "addiction" to use. Why not combine the fun of using the computer with the material I've accumulated and "spread the wealth"! So, here I am, using a desktop publishing program to put together some of this material in the form of a book. Many of you have asked about starting a "user's group", or a newsletter, or some other forum to share ideas about using, modifying and expanding the project. Maybe this book might serve as the catalyst to bring us together.

In the following pages I've put together a sampling of the many letters I've received, many with suggestions that I have not had the opportunity to evaluate. They are offered to you with the knowledge that there are many "gems" here that you might want to incorporate into your version of our project. I have reprinted them with a minimum of editing, along with their original (scanned) drawings and photographs. In every instance, I've obtained the permission of the authors to publish and include the source of the material. Some of the photos and schematics may not have reproduced too well, but if you find something interesting, you might want to contact the authors directly, or through me. These are all fine people interested in sharing their ideas. We will serve as a "clearing house", while accumulating more material for a second volume. If you have any ideas (photos, modifications, schematics, etc.) that you would like to share, send them along ASAP. **If we use your material in a second volume, we will send you a complimentary copy of the new book.**

1-9
ACKNOWLEGEMENTS

Any book is the creation of many people. This one is no exception.

Firstly, it could not have been possible without the enthusiasm of the users of the Poor Man's Spectrum Analyzer, especially those creative individuals who took the time and trouble to write me describing their experiences with our project. Their feedback was primarily responsible for the contents of the book. They were all kind enough to make their contributions available for the benefit of us all

A special thanks to Terry Northup (KA1STC), editor of Communications Quarterly for her kind permission to reprint the Poor Man's Spectrum Analyzer articles that appeared in Ham Radio and Communications Quarterly magazines, and to the authors of those articles for the nice things they said about our project.

And for our cover, thanks to Bob Baugher (W3TES), who did such a fantastic job on packaging his Analyzer! We showed off his finished unit at Dayton and Timonium, and could have sold a dozen of them.

Thanks also to my son Bruce (WA2DRO) for his help in organizing and proof reading the material and keeping our mail order operation running while I worked on the book.

And, an extra special thanks to the one who suffered the most during this period, my ever loving wife Lee, ...without her understanding and patience this book would never have been possible.

This is what Bob Baugher's version (cover picture) of "The Poor Man's Spectrum Analyzer" looks like on the inside. The power supply and Tracking Generator are mounted under the chassis.

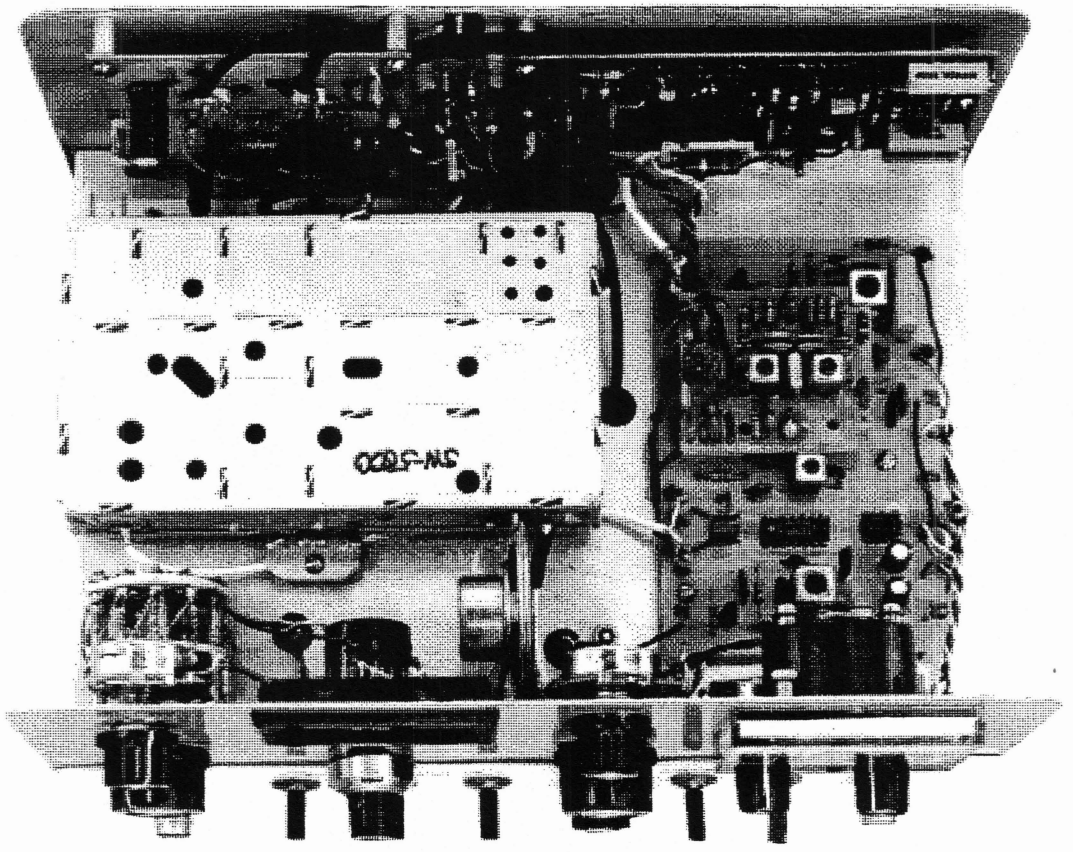

CHAPTER TWO

Tutorial

What you always wanted to know, but didn't know who to ask.

Spectrum Analyzer basics.

Sidebands and some Myths.

2-1
RF VISION. A TUTORIAL.

Want RF VISION? Build our Spectrum Analyzer. With RF VISION you will have a new monitoring mode, with rapid signal detection, modulation analysis, band condition and activity information constantly available at your finger tips! This instrument will provide information and operating techniques that will add to your appreciation of the RF Spectrum in ways you never thought possible before. As an educational tool, it will allow you to actually *SEE* the *Electronic Spectrum* in "real time". It will help you understand the real significance of sidebands. Do you believe the myth that "the amplitude of the carrier varies in AM, but not in FM"? You will see that the exact *OPPOSITE* is true! What we are describing is an instrument that converts any 'scope from a *TIME DOMAIN* display into a *FREQUENCY DOMAIN* display. Spectrum Analyzers have been around as laboratory instruments for many years, ranging in price from $4000 to $50,000. What makes this one so special is it's simplicity and ultra low cost. The Spectrum Analyzer we will build consists of six individual modules. The addition of a seventh module (Tracking Generator) converts the Spectrum Analyzer into a powerful receiver system for stimulus-response measurements.

WHAT'S IT ALL ABOUT?

First, lets talk a bit about the "*Spectrum*". Radio, television, and radar transmitters are constantly radiating energy into our environment. This energy is called "electromagnetic radiation". Broadcast radio transmitters radiate energy in a band of frequencies ranging from approximately 500 to 1500 Kilohertz. Commercial FM transmitters operate in the 88 to 108 Megahertz band. Television and radar signals are located in the VHF, UHF and microwave bands. The basic difference between these transmitters is their frequency. If we continue to even higher frequencies, we get into the realm of infrared radiation. This band of frequencies are so high that we perceive them in the form of heat, even though they are a form of electromagnetic energy. Going even higher in frequency, we get into the area of light, starting with red light at lower end of the band, green at the center and violet at the upper end. Going a bit higher takes us into the ultraviolet range of frequencies. Energy in this range of frequencies becomes invisible again, but causes certain materials to fluoresce. Above ultraviolet frequencies are the X-Rays, Gamma Rays, etc. All are forms of electromagnetic radiation, with the basic difference being their frequency! Incidentally, all electromagnetic radiation travels at the speed of light.

Draw a horizontal line on a sheet of paper. Label it "*Frequency*". Mark the location of all the different signals we have discussed along it's length, with the

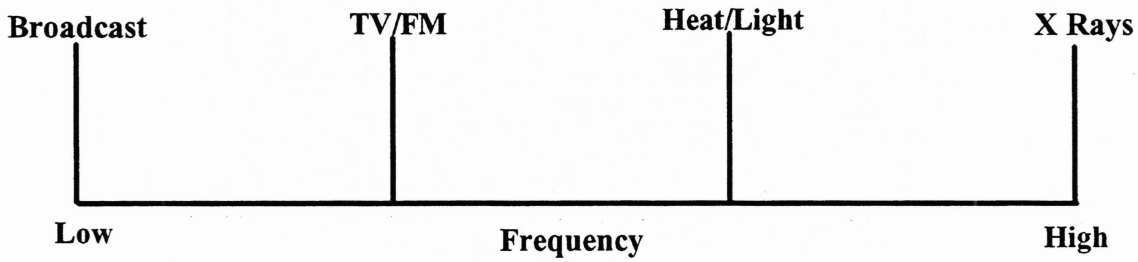

Fig.1

Broadcast Band at the left (LO-Frequency) end and the X-Rays at the right (HI-Frequency) end. What we have drawn (Fig.1) is a simple representation of a major portion of the *ELECTROMAGNETIC SPECTRUM.*

There is another piece of the Frequency Spectrum, from 0 Hertz up to the Broadcast Band which we haven't mentioned. ("Zero" Hertz actually could be considered DC, if we assumed some energy present at 0 Hertz.) Most of these lower frequencies are not considered part of the Electromagnetic Spectrum, since they do not have the characteristics of Electromagnetic Radiation. For example, the 20 to 20,000 Hertz portion of this lower part of the spectrum is the audio band of frequencies. Since our analyzer is an *RF* Spectrum Analyzer, it operates in that part of the spectrum above the broadcast band and extending up through the UHF band. The transmitters in this range are pumping RF energy into their antennas. Electromagnetic waves radiate out from these antennas at the speed of light, 186,000 miles per second. As they pass a receiving antenna, they induce RF currents which are fed into a receiver. A resonant circuit in the receiver selects the signal from one of the transmitters, rejecting (hopefully) all the others.

We can't SEE any of the radio signals that are always around us, but we could use a radio receiver to HEAR them, one at a time. Or, we could use a TV receiver to see the images carried by the RF signals in the TV part of the spectrum. Imagine what we might see if we had a device that could look at all those signals at once, and display them lined up in a row, with the lowest frequency signals at the left! Each signal could be represented by a vertical line whose height would be directly proportional to it's strength at our receiving location.

How could we develop such a display? Lets start with a receiver which covers the band we are interested in observing. We start by first tuning to the lowest frequency on the band and slowly tuning up in frequency. As we do this we monitor the signal strength readings on the "S" meter, recording the frequency and strength of every signal we receive as we go. Rather than list all the numbers, we'll use a sheet of

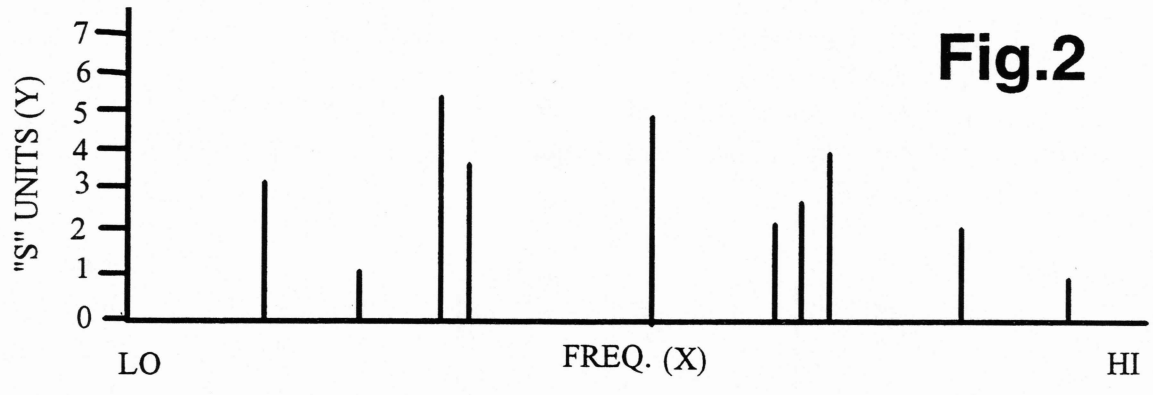

Fig.2

graph paper on which we have drawn a horizontal line across the bottom. This line (the **X** axis) should be marked **"frequency"**, with the lowest frequency we will be tuning on the left, and the highest on the right. Each square above the line would be marked in **"S"** units, starting with 0 on the base line and increasing as we go up. These readings

on the **Y** axis will represent received signal strength. Now, as we tune across the band, draw a vertical line, starting from the horizontal base line at the location corresponding to the frequency at which the signal was found, and rising vertically as many units as the "S" meter indicates. When we have completed this task, we will have drawn a display of a section of the RF spectrum showing all of the signals received and their relative strengths (Fig.2). Now, if we could replace this tedious, manual procedure with an all electronic, continuous display on a CRT, we would have a basic Spectrum Analyzer.

Most commercial spectrum analyzers have a built-in 'scope to display the spectrum. The Spectrum Analyzer we will build will work with ANY 'scope, since it's

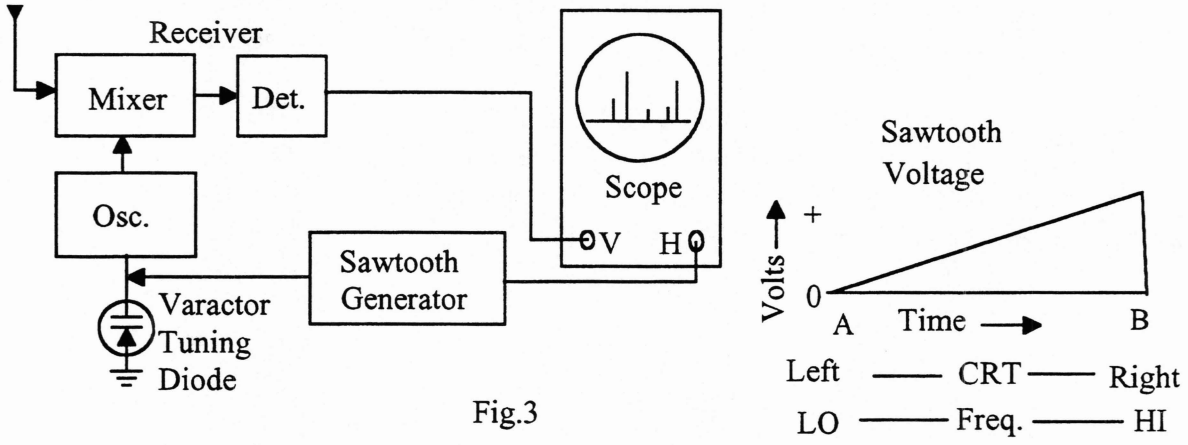

Fig.3

output signals are in the audio range of frequencies. The analyzer itself is an electronically tuned superhetrodyne radio receiver, similar to a scanner, except that the tuning is continuous, rather than in steps. An electronically tuned receiver uses varactor diodes (voltage variable capacitors) in place of mechanically variable capacitors to tune across the band. A sawtooth voltage is applied to the varactor tuning diodes. As this tuning voltage increases in amplitude (Fig.3), it causes the receiver to tune across the band. This same sawtooth voltage is also applied to the horizontal input of the 'scope. This causes the electron beam in the CRT to trace a horizontal line across the screen, from left to right. Let's assume that we are tuning from 50 to 100 MHz. When the sawtooth tuning voltage is at it's lowest level (point A), the receiver will be tuned to 50 MHz. At the same time, the horizontal sweep on the 'scope will be at the extreme left side of the CRT. As the sawtooth voltage increases in amplitude, the receiver tunes to a higher frequency and the beam in the CRT moves across the screen from left to right. When the sawtooth voltage reaches it's maximum amplitude (point B), the receiver will be tuned to 100 MHz and the 'scope beam will be at the extreme right hand side of the CRT. Therefore, the instantaneous horizontal position of the electron beam is always directly related to the frequency being tuned by the receiver. The horizontal axis now represents *FREQUENCY*, rather than *TIME*, as in the conventional 'scope application.

At the same time, the "S" meter output of the receiver is applied to the vertical input of the 'scope. As the receiver tunes up across the band, the beam of the CRT moves from left to right in synchronism. When a signal is received, the beam is also deflected vertically, tracing a vertical line whose height is proportional to the received signal strength. When the sawtooth voltage reaches it's maximum value, the receiver is tuned to it's highest frequency and the CRT beam is at the extreme right. The sawtooth voltage then drops rapidly to it's lowest value, tuning the receiver back to it's lowest frequency and snapping the CRT beam back to the left hand side. This process is repeated continuously, updating the display so that any changes appear instantly. Since the vertical deflection corresponds to received signal strength, and the horizontal deflection corresponds to frequency, the resulting display is instantaneous signal strength versus frequency. The conventional scope is said to be operating in the "*Time Domain*" while the Spectrum analyzer operates in the "*Frequency Domain*".

COMPARING THE FREQUENCY AND TIME DOMAINS.

Now that we have seen how the basic spectrum analyzer uses the 'scope, lets delve a bit deeper into the difference between the conventional 'scope display and the spectrum analyzer 'scope display. If we visualize the spectrum as being 3-dimensional, (Fig.4) the difference becomes immediately apparent. This 3-dimensional drawing combines the 3 axes we have been discussing, into one illustration. In the conventional 'scope display, the horizontal (X) axis represents "Time" and the vertical (Y) axis represents "Amplitude". The third axis, "Frequency" would not be visible since it is positioned 90 degrees relative to the other two, which would have it running from the front of the CRT back into the 'scope.

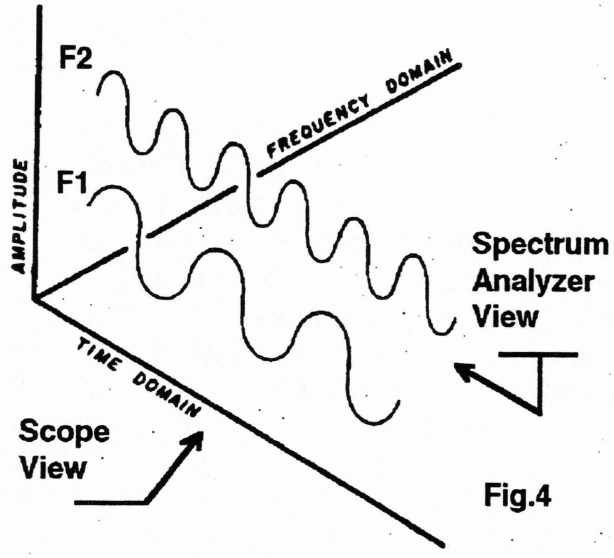

Fig.4

All electrical waveforms or signals are composed of a combination of sinusoidal signals of varying amplitudes and frequencies. We can look at these signals in the *TIME* domain with a conventional 'scope, or in the *FREQUENCY* domain with a Spectrum Analyzer. The conventional scope lets us see the amplitude and shape of the signal with respect to time. The Spectrum Analyzer on the other hand, lets us see the amplitudes and frequencies of the various discrete sine wave signals that make up the more or less complex waveform displayed by the conventional 'scope.

Lets look at a simple example. F1 represents a sine wave signal. If it were the only signal applied to the vertical input of the 'scope, all we would see would be the sinewave F1 on the CRT display. If F1 were replaced by F2 (a higher frequency sine wave), we would see more cycles of the sine wave, since more of them would occur in

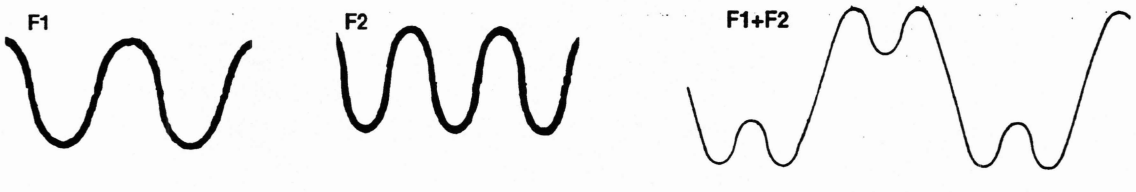

Fig.5

the same period of time that it would take the CRT beam to move from left to right. The conventional 'scope has no difficulty displaying single signals. However, it does have a problem when more than one signal is applied to the vertical input at a time. Instead of displaying each individual signal, the 'scope adds them all together and displays the instantaneous algebraic sum of all of the signals present. Fig.5 illustrates the three different displays we have just discussed.

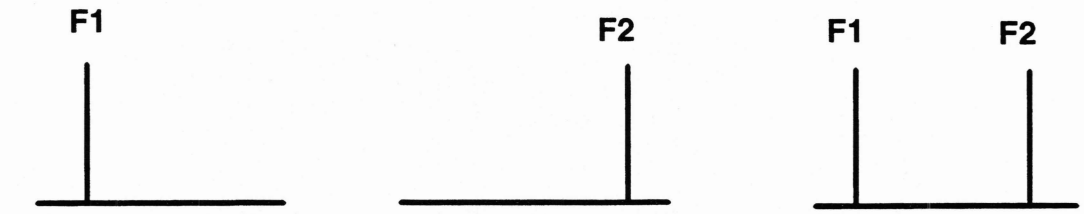

Fig.6

Now, lets see how the spectrum analyzer would display these same three signals. Since the spectrum analyzer's horizontal axis represents "*Frequency*", rather than "*Time*", we would see the three displays illustrated in Fig.6. Both the "Frequency" and "Amplitude" relationships are very clearly visible. If the horizontal ("Frequency") axis were calibrated, not only could we tell that there are two distinct sine wave signals present, but also their relative signal strengths and absolute frequencies!

Another comparison illustrates the power of the spectrum analyzerdisplay. Fig.7A shows us a typical signal that we might see on a conventional 'scope display.

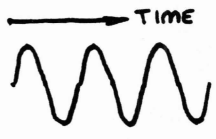

RF SIGNAL AS SEEN ON ORDINARY SCOPE. (IS IT CLEAN??)

Fig.7A

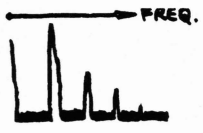

SAME RF SIGNAL ON A SPECTRUM ANALYZER. (WOULD YOU PUT THIS ON THE AIR?)

Fig.7B

It looks like a "perfect" sine wave. However, looking at the same signal on the spectrum analyzer display Fig.7B tells us a lot more about this "perfect" sine wave. It reveals the fact that this almost "perfect" sine wave is slightly distorted! Something that was completely invisible in the conventional 'scope display. The large vertical component off to the left is the fundamental component of the sine wave. The two smaller vertical lines show that there is a measurable amount of harmonic distortion present in the almost "perfect" sine wave. Those two components represent the amount of second and third harmonics of the fundamental sine wave. A measurement of the harmonic amplitudes relative to the amplitude of the fundamental is a measure of the percentage of harmonic distortion.

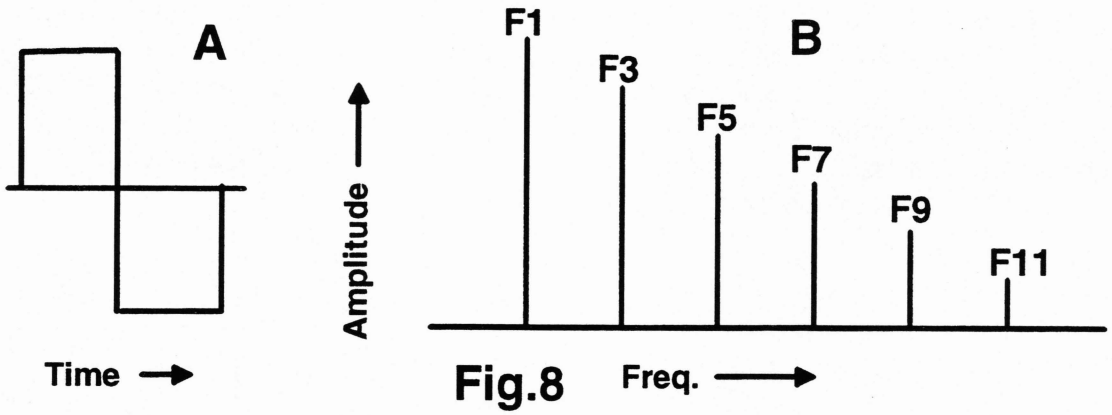

Fig.8

The second example (Fig.8A) shows a square wave displayed on the conventional 'scope. Look at the dramatically different display (Fig.8B) of the same signal when viewed by the Spectrum Analyzer! Now we can see the "fundamental" sine wave at the same frequency as the square wave, plus the other decreasing amplitude signals that make up a square wave. These other frequencies are the 3rd, 5th, 7th, etc. (odd) harmonics of the fundamental frequency.

SIDEBANDS, ETC.

Now that we can appreciate the significance of the 3 dimensional characteristics of electrical signals and know how to look at them in both the TIME and FREQUENCY domains, lets explode a few common myths!

We were always taught that the "carrier" frequency in AM radio carries the "intelligence" (audio, video, etc.) when it is modulated. Right? **WRONG**! It was also explained to us that the "carrier varies in amplitude when it is modulated" in AM radio. Right? **WRONG!** We were also told that in FM radio, the "carrier varies in frequency when it is modulated, and not in amplitude, as in AM radio". Right? **WRONG**!

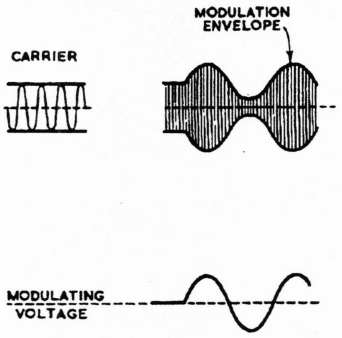

Fig.9A

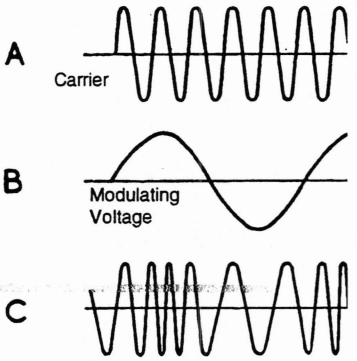

Fig.9B

Fig.9A (amplitude modulated carrier) and 9B (frequency modulated carrier) illustrate the typical textbook drawings that help to perpetuate these popular myths. Both carriers are being modulated by a single, continuous audio tone. Technically, these illustrations are correct, but they neglect to point out that this is what a conventional TIME DOMAIN 'scope would display if either of these 2 signals were applied to it's vertical input. Remember what happens if more than one signal is applied to the vertical input of a conventional 'scope? It shows us the instantaneous SUM of all of the signals being applied! Unfortunately, we can't see the 3rd (FREQUENCY) axis. We can only see the X and Y (AMPLITUDE & TIME) axis, so we can't see the different frequencies that are present.

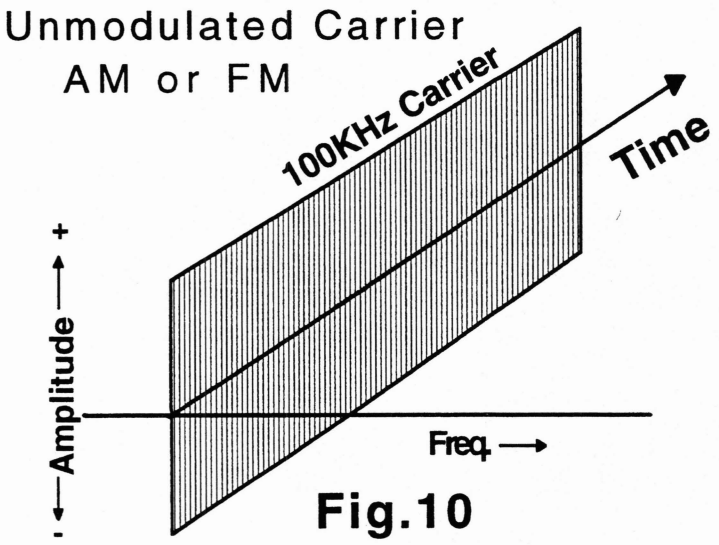

Fig.10

BACK TO THE DRAWING BOARD.

Since we don't have access to a 3-dimensional display, we will revert back to our 3-dimensional drawings which will show us what is actually happening. Fig.10 shows us an unmodulated carrier. It is a single frequency, crystal controlled, continuous amplitude sine wave. We will assume our transmitter is operating on a carrier frequency of 100 KHz. Before it is

modulated, we can't tell whether it is an AM or an FM transmitter. They would both look alike.

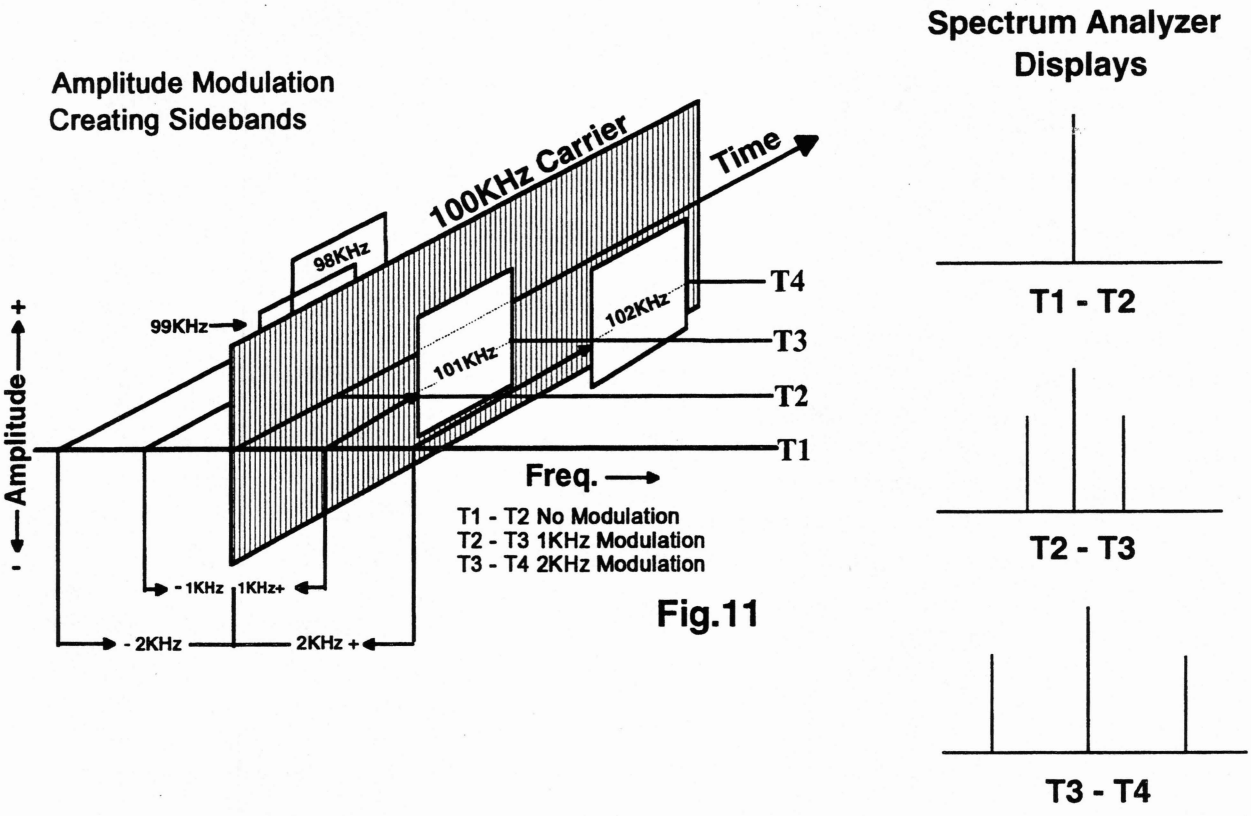

Fig.11

Now lets see what happens when we *AMPLITUDE* modulate this carrier. In Fig.11 we have divided the TIME axis into three equal *TIME* intervals, T1 thru T4. The carrier is left unmodulated for a period of time equal to the interval from T1 to T2, as indicated on the *TIME* axis. For this period there is no change in the *AMPLITUDE* or *FREQUENCY* of the 100KHz carrier. Now we will modulate the carrier with a continuous 1,000 Hz audio tone for the time period from T2 to T3. This 3-dimensional illustration now shows us what *ACTUALLY* takes place when an AM transmitter is modulated! The 1,000 Hz audio creates a pair of *SIDEBANDS*, one 1,000 Hz above the carrier, and another 1,000 Hz below the carrier. Notice that the "carrier" signal at 100 KHz hasn't changed a bit, either in frequency or amplitude! The only change that has occurred has been the addition of the 2 sidebands. Let's change the frequency of the audio tone that is modulating the carrier from 1,000 Hz to 2,000 Hz. The time interval from T3 to T4 shows us the result. Again, we see that the carrier hasn't changed in amplitude or frequency. The only thing that has changed is the distance between the 2 sidebands and the carrier. They are now 2,000 Hz above and below the carrier.

From this we can see that modulating a carrier in AM radio *DOES NOT VARY THE AMPLITUDE OF THE CARRIER!* Instead, the effect of modulation is to *CREATE SIDEBANDS! NO MODULATION, NO SIDEBANDS.*

So far, so good. But, how often do we transmit a single tone? Other than during tests of the Emergency Broadcast System, not too often. Then, what happens when we transmit voice or music, or even TV pictures? These are relatively complex modulating

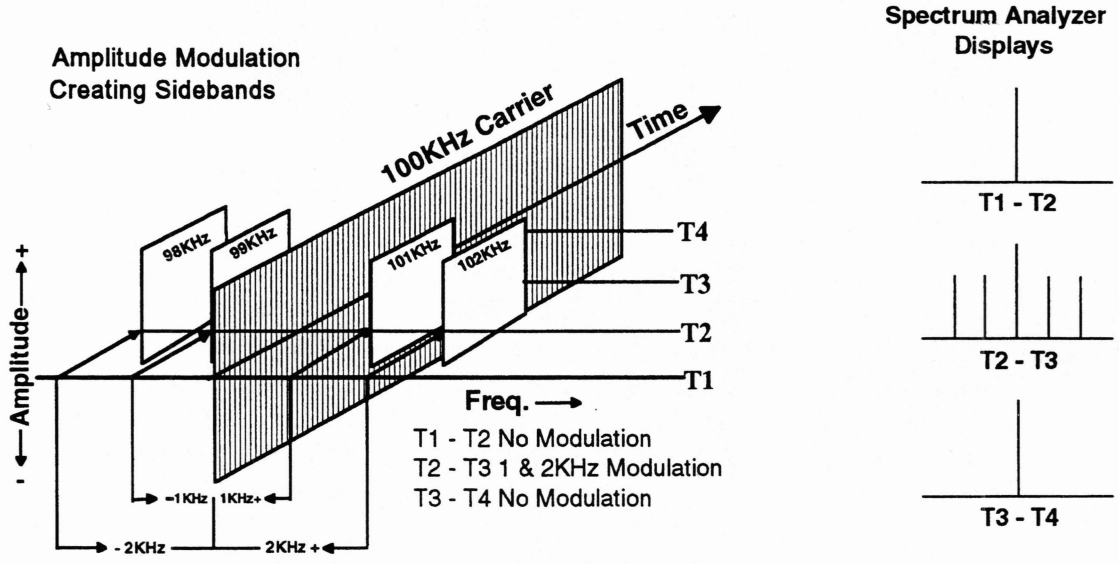

Fig.12

signals. However, as we have previously said, all complex waveforms are actually made up of many individual pure sine waves. For every one of the many individual sine waves that make up the most complex waveform, the AM modulation process will create a unique pair of sidebands, one above and one below the carrier, spaced away from the carrier on the frequency axis by a distance equal to it's individual sine wave frequency. Fig.12 above illustrates what happens when two (or more) tones modulate the carrier at the same time.

ANOTHER LOOK AT THE TEXTBOOK MYTHS.

Further in our study of AM radio we are taught that detection (demodulation) simply consists of rectifying the "varying amplitude carrier" and filtering out the "half wave" pulses, as in Fig.13. Sounds so simple and plausible. However, if our new

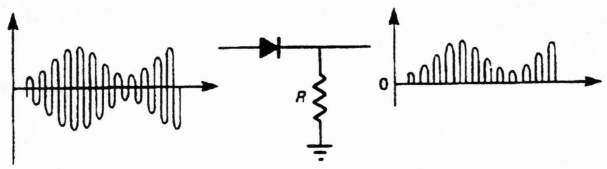

Fig.13

understanding of what is actually happening is true, and if the carrier *NEVER* really varies in amplitude, then how *DOES* the diode detector work? As a matter of fact, if we were to reduce the receiver's bandwidth to a point where only the carrier frequency would reach the diode detector, we would find that the output of the detector would be a steady DC voltage whose amplitude would only be a measure of the strength of the received signal. Since the sidebands were eliminated by the reduced bandwith, none of the audio that originally modulated the carrier would be recovered! More on this later.

DISTORTION, IS IT GOOD OR BAD?

Let's step back a bit and see if we can gain a better understanding of what is happening, and while we are at it, explode another myth. DISTORTION is always BAD. Right? **WRONG**! You mean there are times when DISTORTION is GOOD? Yup! As a matter of fact, without distortion, neither our transmitters, nor our receivers would work. Remember the "almost perfect" sine wave we talked about earlier? It looked perfect on the conventional 'scope, but when we looked at it with the Spectrum Analyzer we found that it was slightly distorted, and that the distortion showed up as additional sine waves, harmonics of the fundamental frequency. If we could clean up the distortion, the harmonics would disappear. It's this ability to create new frequencies when signals distort that makes it possible to modulate and demodulate, as well as do many other useful chores in electronic circuits.

When we are shopping for HI-FI audio equipment, we look for amplifiers with the lowest distortion figures we can find. We don't want the equipment to add new frequencies that were not intended by the performers. We want the circuits to operate in the most LINEAR fashion. Any non-linearity produces distortion products, which are new frequencies. If we apply two frequencies (A and B) to the input of a linear circuit (Fig.14A), we would only see those same two frequencies in its output. However, if we were to apply those same two frequencies to the input of a non-linear circuit (Fig.14B), we would find that in addition to the two input signals A and B, we have two new frequencies...

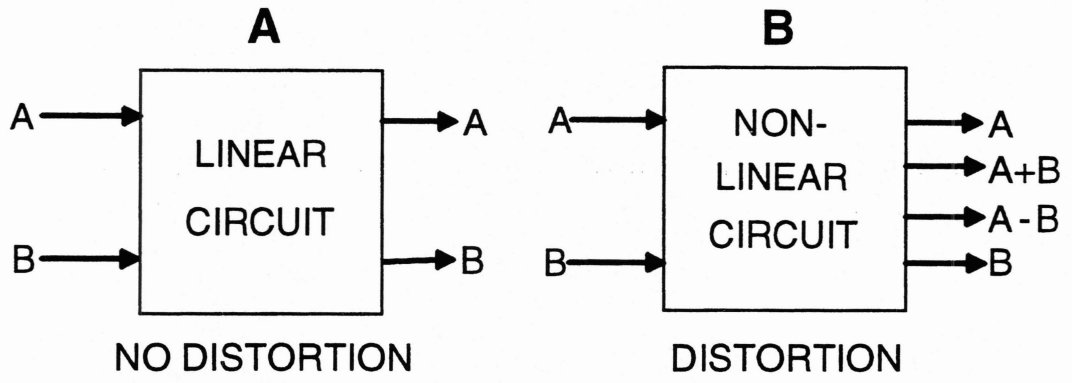

Fig.14

their sum (A+B) and their difference (A-B). This is what Modulators, Demodulators, Mixers, Detectors, Frequency Multipliers, Converters, etc. all have in common. They all create DISTORTION. If they didn't, they wouldn't work!

Let's substitute some numbers for A and B in Fig.14. If A is an audio frequency (1 KHz) and B is an RF frequency (100 KHz), then their sum (A+B) would be 101 KHz, and their difference (A-B) 99 KHz. If B was an AM carrier and A was the audio frequency modulating that carrier, then A+B would be the upper sideband (101 KHz) and B-A (99 KHz) would be the lower sideband, and the non-linear circuit that accomplished this miracle, would be called a "Modulator". One element is missing to make the circuit operate properly. Notice that we have 4 output signals. All but one are RF signals. "A" is the original audio signal that produced the sidebands, but is unwanted in the output of the transmitter's modulator. Let's add an LC circuit tuned to 100 KHz at the output of the modulator. This tuned RF circuit has enough bandwidth to pass the 3 RF signals, but looks like a short circuit to ground for the audio signal. All we have left is the carrier, plus it's two sidebands. Remove the audio signal (A) from the input to the circuit, and audio signal (A), the sum signal (A+B) and difference signal (B-A) disappear. All that remains is signal (B), the carrier. Without audio to modulate the carrier, no sidebands would be created. All that is left is a "dumb" carrier without any "intelligence".

If the output of Fig.14B was viewed on a 'scope, we would see the traditional textbook illustration of what appears to be the carrier varying in amplitude. Fig.15 illustrates the three components, B - A (Carrier minus Audio), B (Carrier) and B + A (Carrier + Audio) whose instantaneous amplitudes are added together and displayed on the 'scope. The three vertical dotted lines illustrate clearly how the instantaneous amplitude and phase of the three components, when added together affect the instantaneous TOTAL POWER of the overall signal. The first (leftmost) vertical line occurs at a time when all three components are at maximum amplitude and in phase. The resulting sum of the carrier and sidebands is then at maximum. The next vertical line occurs at a time when all three components are also at maximum, BUT the carrier is 180 degrees out of phase! At this point, the sum of the power in the sidebands

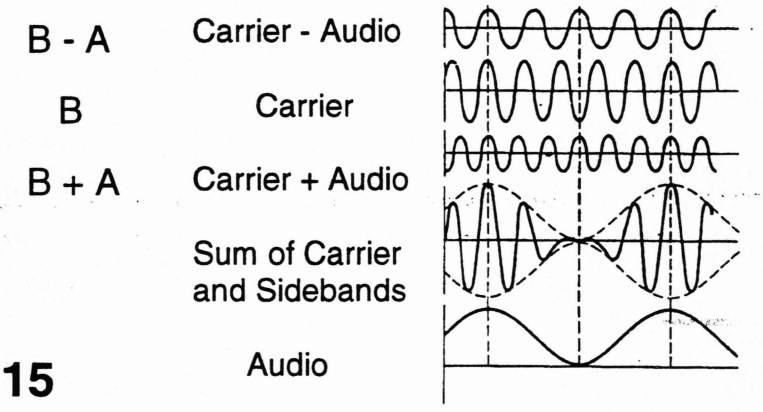

Fig.15

equals the power of the carrier, resulting in almost 100% power cancellation. This is typical of the condition of 100% modulation. The third vertical line again occurs at a time when all three components are at maximum and in phase, producing maximum total power.

DEMODULATORS

Demodulators reverse the process of the Modulators. Referring back to Fig.14B, we saw how two signals into a non-linear device (the Modulator) produced SUM and DIFFERENCE signals in the output. If we were to now take those same three signals and put them into another, similar non-linear device, we would find this process

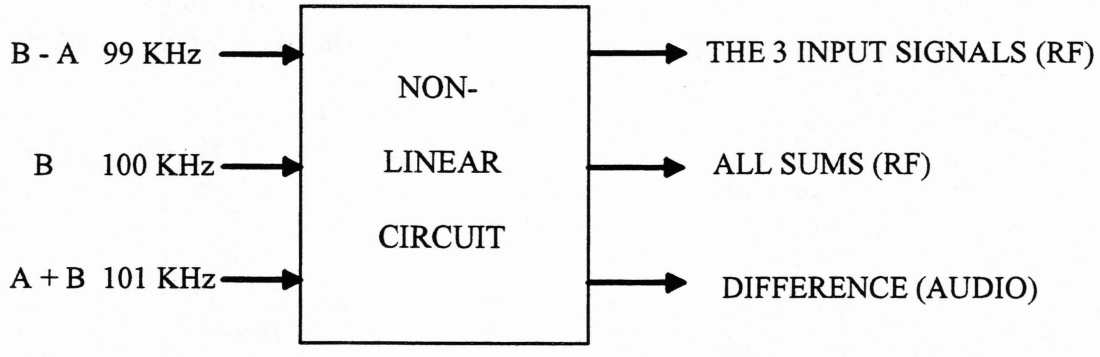

Fig.16

repeated, except that we would be starting with three input signals instead of two. The distortion now produces a new set of SUM and DIFFERENCE signals (Fig.16 above). Since all of the input signals (Carrier and Sidebands) are RF signals, their sums would also be RF signals. However, their differences would be audio, equal to the spacing in

frequency between the carrier and it's sidebands. In a receiver's detector (demodulator), it is this "difference" signal that we are interested in, since it represents the original audio signal that was input into the non-linear (modulator) stage at the transmitter. Diodes are commonly used as detectors in AM receivers. It can function as a detector (demodulator) because it is a non-linear device. Referring back to our diode detector circuit in Fig.13, the simple addition of a capacitor across resistor "R" shorts out all of the RF signals (the 3 input signals plus the sums) but appears as an open circuit to the recovered audio (difference) frequency.

A QUESTION AND AN OBSERVATION: Since the AM carrier NEVER varies in AMPLITUDE, how can it "carry" intelligence? It's the frequency relationship between the carrier and it's sidebands that "carries" the intelligence. That's what makes DSB (Double Sideband) and SSB (Single Sideband),etc. possible.

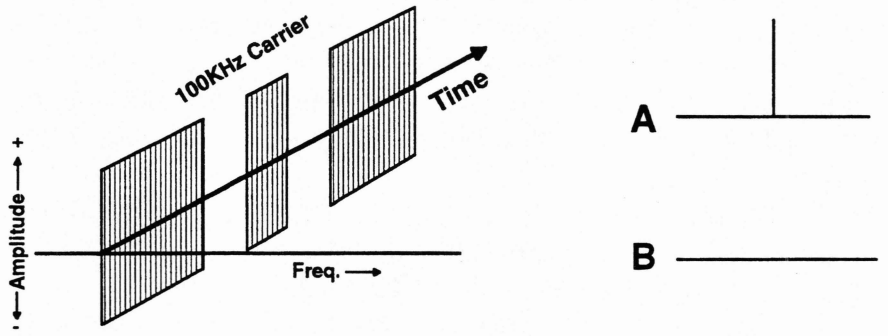

Fig.17

The simplest method of transmitting intelligence by radio uses ICW (Interrupted Continuous Wave) transmission. A carrier signal is keyed on and off (Fig.17) in a pre-arranged manner (Morse code or Digital, etc.). In this system, the intelligence is actually "carried" by the carrier. There are no sidebands carrying the intelligence, as illustrated by the Spectrum Analyzer displays in **A** and **B**. (Strictly speaking, for the "purists", some sideband energy may be generated by the abrupt on-off transitions). This type of transmitter doesn't even have a modulator stage. All of the transmitter's output energy is concentrated in the carrier, instead of being spread out over a much wider segment of the spectrum. This increase in system efficiency accounts for the widespread use of this mode in amateur radio DX (long distance) communication. Since the signal occupies such a narrow part of the spectrum, the receiver's bandwidth can be reduced to substantially improve the signal-to-noise ratio as well as it's sensitivity. This improved selectivity also makes the receiver more immune to interference from adjacent signals and noise.

Since this type of transmitter does not send sidebands, a receiver with a simple diode detector could not recover any audio tones to help us listen to it's signal. All we would hear would be "thumps" as each burst of RF was received. However, if we were to add a signal (in the receiver) 1KHz above or below the received signal, it would act

as a sideband. The diode (or any other non-linear circuit) would produce a 1KHz difference signal which we would hear every time the carrier was being received! This locally generated RF signal is produced by the BFO (Beat Frequency Oscillator) in a communications receiver. As we adjust the frequency of the BFO, we are moving it closer to, or further away from the received carrier, resulting in a varying tone that is exactly equal to the difference between it (the BFO) and the received carrier. This gives us a very efficient system, in terms of spectrum utilization. All the transmitted energy is used to get the signal from point A to point B. No energy is wasted in signals that will only be used as a REFERENCE in the receiver to recover the transmitted intelligence, as in the previously discussed DSB (Double Sideband) signal.

Looking back at the conventional AM DSB system, think about how wasteful it really is. We have learned that the carrier doesn't carry any intelligence, and it uses up most of the transmitter's power. The intelligence is in the sidebands by virtue of it's frequency relationship to the carrier. If all we need the carrier for at the receiver is to be able to determine it's frequency relationship to it's sidebands, why can't we use a locally generated signal (as with the ICW signal) to replace the carrier in the receiver? Turns out that we can. If we suppress the carrier at the transmitter and only transmit the sidebands, a locally generated signal inserted ahead of the non-linear circuit (detector/demodulator) provides us with the reference needed to recover the audio (difference) signal.

Since each of the sideband pairs (upper and lower sidebands for each modulating frequency) carry the same intelligence, why transmit both? Good question. Suppressing one set of sidebands (SSB), either upper or lower, further reduces the transmitter power, as well as reducing the amount of spectrum needed to half of the original bandwidth.

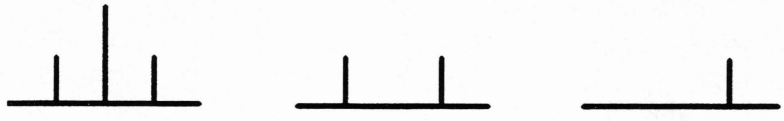

DSB **DSB Suppressed Carrier** **SSB**

Fig.18

Fig.18 above illustrates the Spectrum Analyzer view of the three systems, full DSB (Double Sideband), DSB (Suppressed Carrier), and SSB (Single Sideband).

A further variation of AM Single Sideband is the Vestigial Sideband system used to transmit commercial TV. The video (picture) signal is transmitted using amplitude

modulation and contains frequency components up to approximately four megahertz. Conventional AM modulation would produce sidebands extending up to four megahertz above and four megahertz below the carrier, occupying a total of EIGHT megahertz of spectrum! Then there is the audio signal, using frequency modulation, which requires some additional spectrum space. Realizing that the upper and lower sets of sidebands were mirror images of each other, the developers of the system elected to eliminate one set of sidebands to conserve transmitter power and spectrum. Designing a filter to produce a sharp cutoff (square corners) without introducing phase shifts was an impossible task, so a compromise solution was adopted. The filter was designed so that it was flat from 0.75 MHz below the picture carrier (lower sideband) to 4.0 MHz above it (upper sideband). It then allows 0.5 MHz more of the lower sideband, plus 0.2 MHz more of the upper sideband to pass before it drops to zero. Allowing a "vestige" (part of) the lower sideband to pass, creates a *Vestigial* Sideband system. Instead of occupying almost 10 megahertz of spectrum (including the FM sound signals), all of the intelligence of the TV signal fits into a 6 megahertz slot, as in Fig.19.

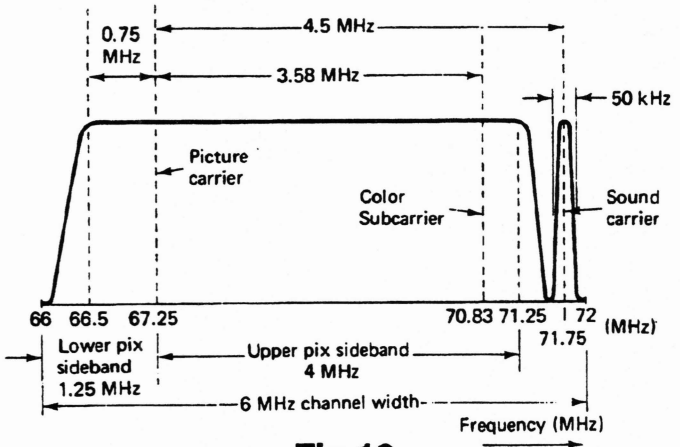

Fig.19

Now that we know all about AM sidebands in 3-D, can you tell me what Fig.20 illustrates?

And, if you liked this tutorial, drop me a line and I will continue it in Volume 2.

Murray, WA2PZO

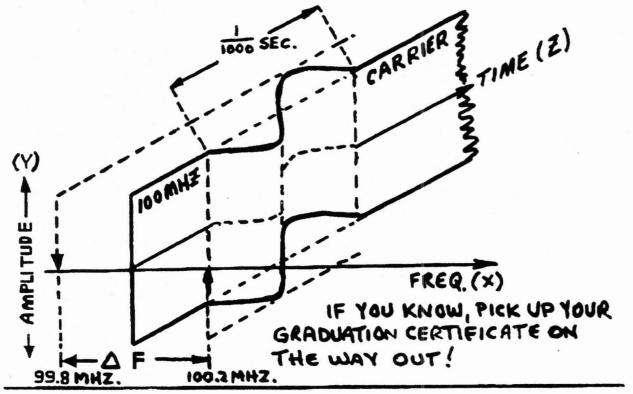

Fig.20

CHAPTER THREE

Magazine Articles

Reprints from Ham Radio and Communications Quarterly, etc.

low-cost spectrum analyzer with kilobuck features

Build WA2PZO's useful instrument for operating position and lab bench

Although laboratory-grade spectrum analyzers cost $4500 or more, you can build a spectrum analyzer offering many features of its costlier cousins for about $50. How can such amazing capabilities be had at such incredibly low cost?

- *Through the use of a commercially mass-produced varactor tuned TV tuner that covers the VHF low, VHF high, and UHF TV bands.* It will tune down through the 2-meter and 6-meter Amateur bands without modification, with better than 1-microvolt sensitivity. By using a crystal-controlled converter and a narrower IF filter, any one of the HF Amateur bands could be viewed as well, by simply upconverting to a TV channel.
- *Through the use of consumer-grade integrated circuits in the oscillator/mixer, dual ceramic filter, IF amplifiers/detector, and audio amplifier (offering audio as well as scope output it is really a spectrum monitor).*
- *Through the use of your own oscilloscope.* Just about any scope may be used; I used a 1951 Heathkit Model OL-1 with its original cathode ray tube.

spectrum analyzer applications

Spectrum analyzers allow the user to observe in real time an adjustable/variable bandwidth of radio frequencies. One of the earliest spectrum analyzers for the ham bands was the "Panadaptor," manufactured by Hallicrafters in the early 1950s. I used one to check for F2 propagation 6-meter band openings in the mid-1950s and credit the panadaptor with my earning the IARU 6-meter WAC award (phone) issued by the ARRL.

The band of frequencies swept by the spectrum analyzer described in this article may be varied from zero up to about 38 MHz on VHF low TV = 50 MHz – 88 MHz, zero up to about 85 MHz on VHF high TV = 135 MHz – 220 MHz, and zero up to about 300 MHz on the UHF TV = 500 MHz – 800 MHz. When the sweep width is set at zero, each of these bands of frequencies may be manually tuned just as in a single-frequency receiver. Both wideband FM and narrowband FM signals, and surprisingly, even amplitude modulated signals are detected quite well by the FM IF amp/detector IC and amplified by the audio IC.

Figure 1 is a block diagram of this spectrum analyzer using a Sanyo varactor tuned TV tuner. A ten-turn, 10k pot with +35 VDC across it is used to adjust the center frequency of the tuner. A low varactor bias yields low frequency and a high varactor bias provides higher frequency on the TV band to which the tuner is set. The sawtooth sweep voltage that is capacitively coupled into the tuner's varactors is the horizontal sweep voltage from the oscilloscope. If your scope doesn't have the horizontal sweep output (the Heathkit OL-1 does not), just mount an RCA phono jack on the front of the scope and bring out the horizontal sweep from the scope's horizontal multivibrator to this point. The 100 kilohm load across the horizontal sweep output should have little or no effect on the scope's operation.

Besides the TV tuner and scope, the rest of the circuit consists of only three integrated circuits. The second mixer/oscillator chip is a Siemens SO42P. The ceramic filter is a Murata SFJ two-section filter at 10.7 MHz. The combination IF amp/detector/AGC amp is a National LM-3089N, and the 1/2-watt audio amp is a National LM-386N.

construction, testing, and alignment

Figure 2 is a schematic of the analyzer. A printed circuit board is available from WA2PZO; I recommend using this and WA2PZO parts kits. (Although the pots, S-meter, and speaker aren't furnished, most are available from Radio Shack.) **Figure 2A** shows the component layout on the WA2PZO printed circuit board (foil side down). Alternatively, you could use perfboard and point-to-point wiring.

Figure 3 is a schematic diagram of the interconnections between the Sanyo tuner, the three-IC printed circuit board, and the scope. Once everything is connected as shown in **fig. 3**, alignment can begin. (It should be easy, since there are only four adjustments,

By Robert M. Richardson, W4UCH, 22 North Lake Drive, Chautauqua, New York 14722

the ferrite cores in L1, L2, L3, and L4.)

With all the parts on hand — and assuming you're using the PCB — assembly time is at most an hour or two. I tuned up my unit using only a grid dip meter as a signal source in about 20 minutes.

Construction of the PCB proceeds as follows:

1. Install the jumper at the lower edge of U3 as illustrated in **fig. 2A.**
2. Install the 11 resistors as shown in **fig. 2A.**
3. Install the 16 capacitors as indicated in **fig. 2A.** Since C6 and C7 are electrolytics, be sure to observe the polarity indicated in **fig. 2A.**
4. Install the Murata ceramic filter, FL1. Because it's symmetrical, it can be installed in either direction.
5. I recommend carefully installing sockets for U1 (16-pin DIP), U2 (8-pin DIP), and U3 (14-pin DIP).
6. Install L1 through L5, carefully bending the pins slightly so that they fit easily into the PCB's pre-drilled

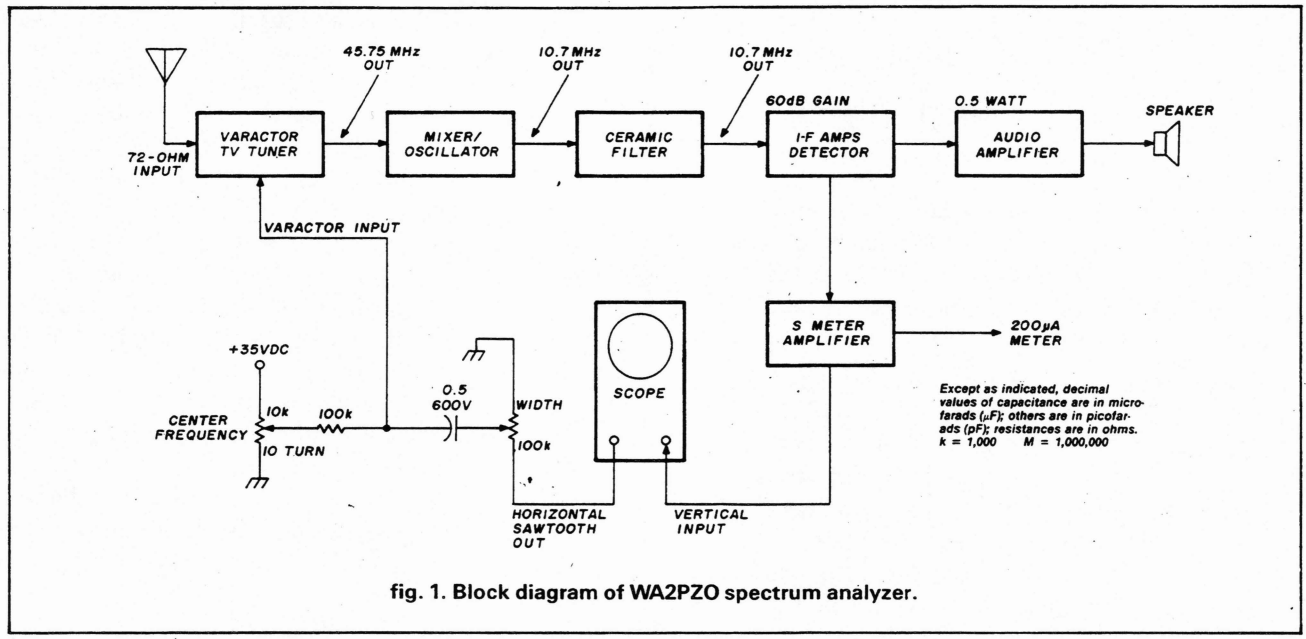

fig. 1. Block diagram of WA2PZO spectrum analyzer.

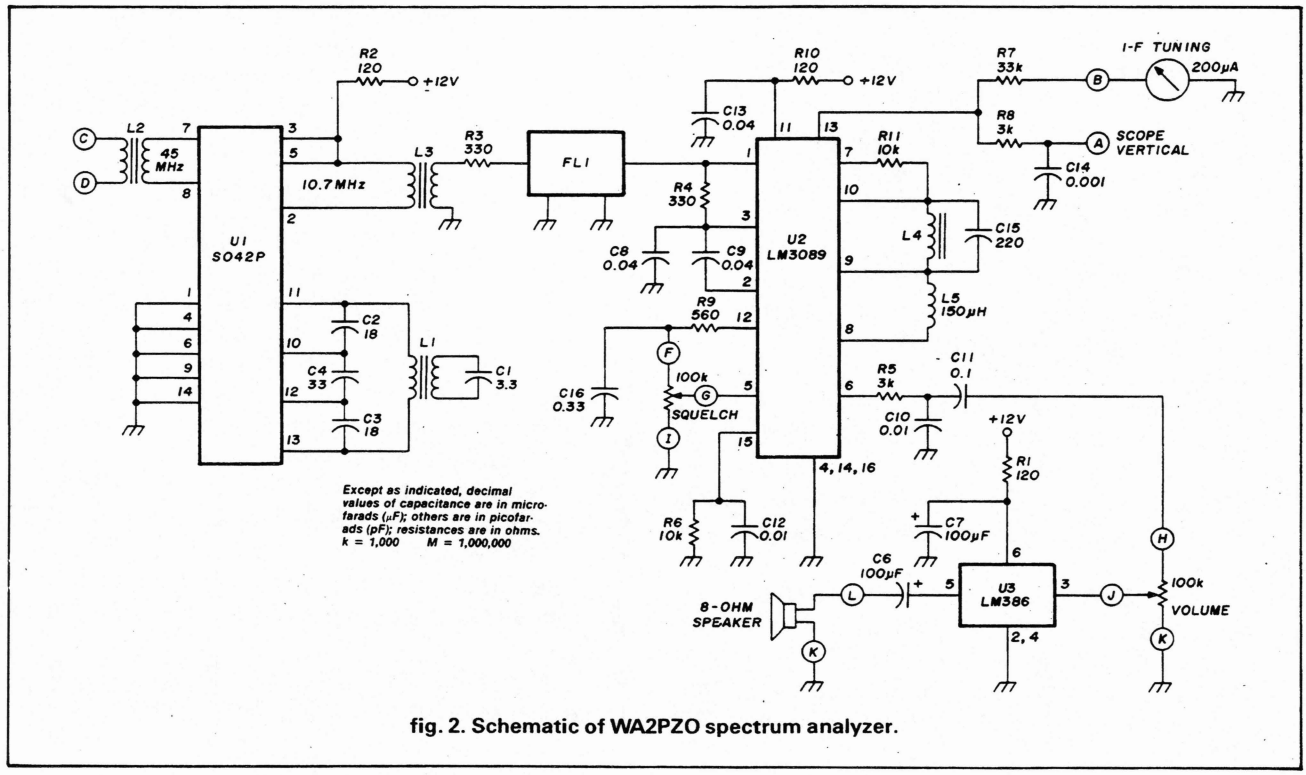

fig. 2. Schematic of WA2PZO spectrum analyzer.

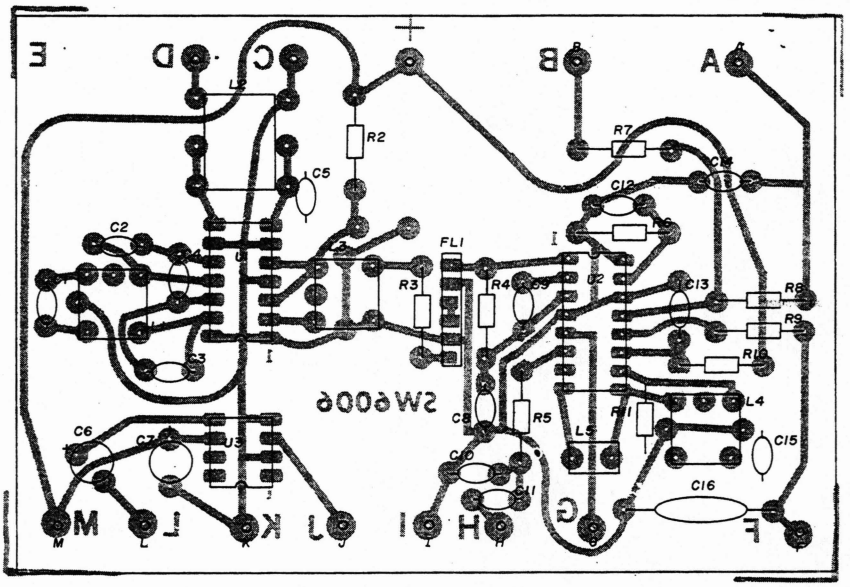

fig. 2A. Component layout on the WA2PZO printed circuit board (foil side down).

holes. Because L5, the 150 μH inductor, is symmetrical it can be installed in either direction.

7. Most important: lubricate the small ferrite cores of L1, L2, L3, and L4 with a drop or two of WD-40 *before* attempting adjustment. These cores are extremely brittle; use a plastic or nylon tuning tool matched to the width of the ferrite slots (using a metal one will guarantee their destruction).

8. If you're not using a 200-μA S-meter, install a jumper from 'A' to ground.

Testing and alignment proceed as follows:

1. Connect the TV tuner's VHF input to your 2-meter antenna.
2. Set the VHF/UHF switch to the VHF position.
3. Set the Hi/Lo switch to *Hi*.
4. Make sure the top of the ferrite core in L1 is exactly even with the top of its shielded housing.
5. Set the squelch control to zero and adjust the volume control for a slight hiss from the speaker with the gain control at maximum resistance (10 kilohms).
6. Set the width control (sawtooth sweep from scope) to zero.
7. Connect a voltmeter to pin 10 of the TV tuner (varactor input). Use the +30-volt voltmeter range (adjust the center frequency 10k-turn pot so that varactor bias is below +30 VDC).
8. Turn the center frequency pot slowly down (reducing varactor bias voltage) until a local TV video carrier is both heard on the speaker (buzz) and seen on the scope. If no TV stations are nearby, use a signal generator with modulated output or a grid dip meter.

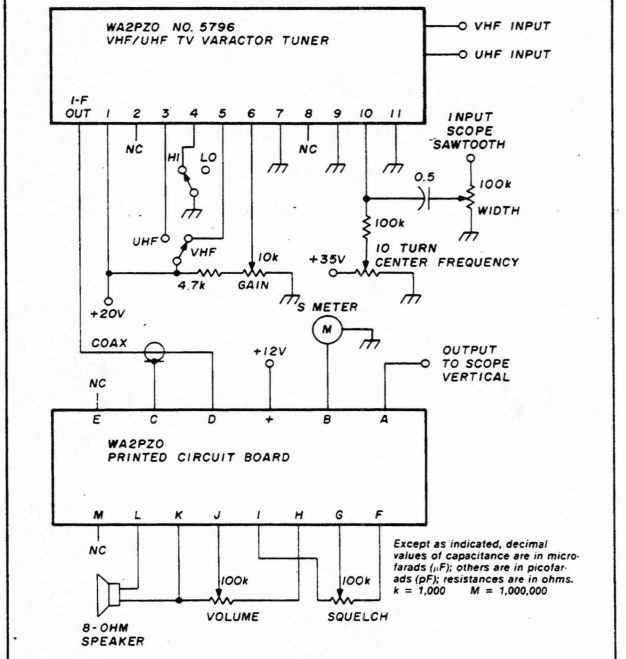

fig. 3. Schematic showing interconnections between tuner, printed circuit board, and oscilloscope. Note: +35, +20, and +12 VDc sources are regulated supplies.

9. Peak the ferrite slugs in L2 and L3 for maximum signal output on the scope.
10. Continue tuning the center frequency pot until a TV audio signal is found, then adjust L4 for maximum

audio output and minimum background noise from the speaker.

11. Though each varactor tuned TV tuner will have somewhat different voltage versus frequency response, see **fig. 10** to see the response we obtained using a Sanyo varactor tuned TV tuner.

Figure 4 is a photo of our finished spectrum analyzer. The tuner and PCB are mounted on top of a 2 x 5 x 9-inch (5 x 13 x 23 cm) aluminum chassis. The PCB is mounted on 1/2-inch (1.3 cm) threaded standoffs. Left to right, the five pots are: volume, squelch, center frequency, sweep width, and tuner gain. The two mini-toggle switches on the right of **fig. 4** are VHF-UHF (top) and VHF LOW—VHF HIGH (bottom). On the rear of the chassis are six RCA phono jacks: +35 VDC for tuner center frequency; +20 VDC for tuner; +12 VDC for oscillator/mixer, second IF amps, U3 audio amp; horizontal sweep from scope; vertical output to scope; and audio output to the 8-ohm speaker.

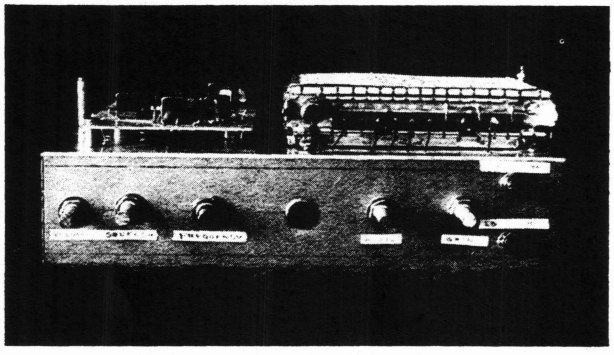

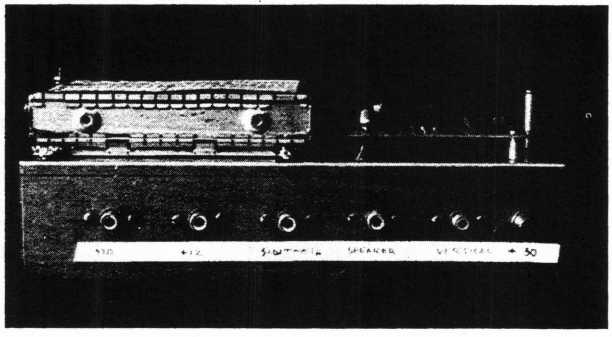

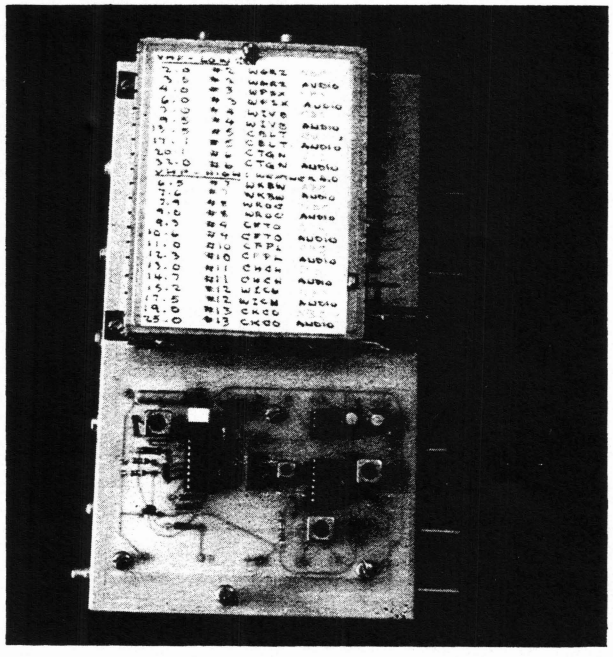

fig. 4. Completed spectrum analyzer: (A) front, (B) rear, (C) top.

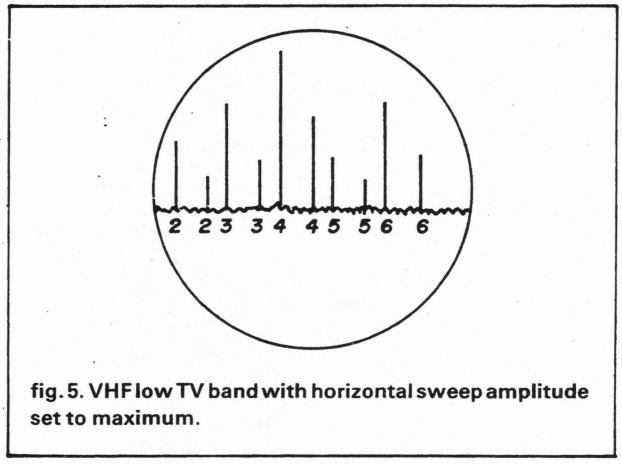

fig. 5. VHF low TV band with horizontal sweep amplitude set to maximum.

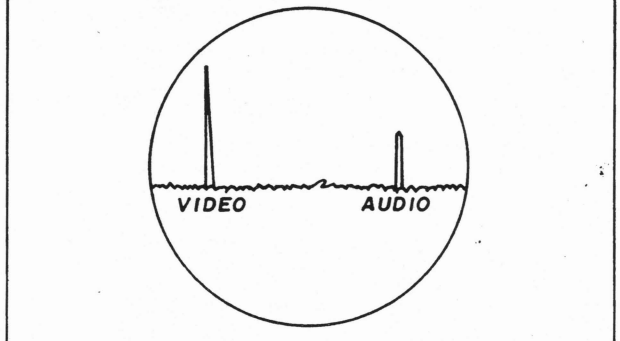

fig. 6. 8-MHz horizontal sweep width, with channel 2 video signal at left and channel 2 audio at right.

operation

Now the fun really begins. For antennas, I used my two 23-element Cushcraft 2-meter "Boomers." (No, I don't bounce signals off the moon with them, but I can work into 2-meter repeaters in Toronto, some 125 miles away. My QTH is on the south shore of Chautauqua Lake, some 65 miles southwest of Buffalo; because of this distance, and the presence of a range of hills about 300 feet (90 meters) high between Buffalo and Chautauqua, TV signals aren't par-

ticularly strong. Nevertheless, all the TV channels on both the VHF low TV and VHF high TV bands were displayed on the first try. Both the vestigial sideband video signal and its accompanying FM audio signal were clearly displayed for each channel.

Figures 5 through **10** are sketches of the oscilloscope display in the noted modes of operation. (Oscilloscope cameras cost about $300; I chose not to add one to my $39.95 Heathkit scope.)

Figure 5 shows the VHF low TV band with the horizontal sweep amplitude set to maximum. Each TV channel pair displayed (video and audio) is noted. The height of each signal is proportional to signal strength; some Canadian TV stations really pack a wallop even though they're 125 miles away.

Figure 6 illustrates about 8 MHz horizontal sweep width (left side of CRT to right side of CRT) with the video signal of Channel 2 on the left and the audio from Channel 2 on the right side.

Figure 7 displays the sweep width reduced to about 2 or 3 MHz with the center frequency set to Channel 2's video carrier. Note the blanking and vertical sync pulse riding on top of the carrier.

Figure 8 is the Channel 2 video carrier with the horizontal sweep set to zero. The blanking pulse with the vertical sync pulse on top is on the left side. The eight squiggles to the right of the vertical sync pulse on top of the blanking pulse are the color burst; all the hazy, wavy signals to the right are the video information. The top of the vertical sync pulse represents 100 percent modulation and the bottom ot the video information represents the white level of video at about 15 percent modulation.

Although some scope photos or sketches show 100 percent modulation at the bottom, I prefer it at the top. If you insist on having it at the bottom, simply turn the figure upside down and view it in a mirror.

Figure 9 illustrates the 2-meter band with horizontal sweep representing about 3 MHz. The left side of the CRT is at 145 MHz and the right side of the CRT is at 148 MHz. Spread between 146 and 148 MHz, we can see about six 2-meter repeaters located in the Buffalo and Toronto areas.

Figure 10 is a plot of varactor tuning voltage versus frequency on my Sanyo TV tuner. The 10-turn, 10-ohm pot used for setting the varactor voltage is an absolute "must" for fine tuning.

By reducing the sweep width to zero and single-signal tuning across each band, I was able to copy the audio on the VHF TV low band from the following stations: WGRZ-TV (Channel 2, Buffalo) WPSX-TV (Channel 3, Rochester), WIVB-TV (Channel 4, Buffalo), CBLT-TV (Channel 5, Canada), and CTGN-TV, (Channel 6, Canada). On the VHF TV high band we copied audio from air-to-ground and air traffic control stations; 2-meter repeaters in western New York and the Toronto area; commercial FM pagers; Toronto Coast Guard marine weather on 161.775 MHz; the Erie, Pennsylvania, weather bureau on 162.40 MHz; the Buffalo, New York, weather bureau on 162.55 MHz; WKBW-TV (Channel 7, Buffalo); WROC-TV (Channel 8, Rochester); CFTO-TV (Channel 9, Canada); CFPL-TV (Channel 10, Canada); CHCH-TV (Channel 11, Canada); WICU-TV, (Channel 12, Erie); and CKCO-TV (Channel 13, Canada). On the UHF TV

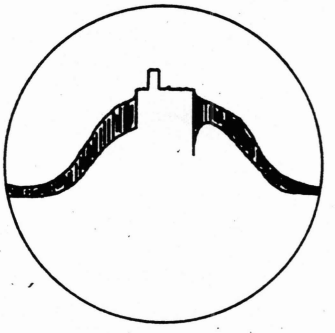

fig. 7. Sweep width reduced to about 2 or 3 MHz with center frequency set to channel 2's video carrier.

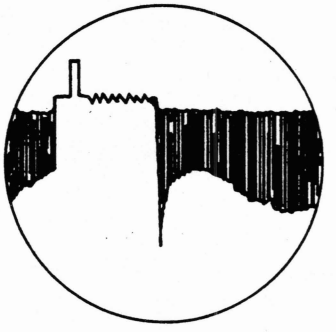

fig. 8. Channel 2 video carrier with horizontal sweep set to zero.

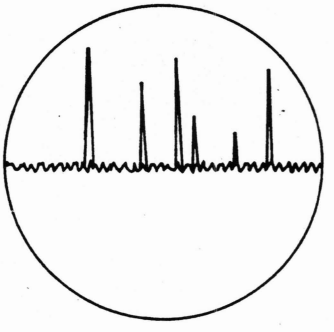

fig. 9. 2-meter band with horizontal sweep representing about 3 MHz.

Fig. 10. Varactor voltage versus frequency (will vary from tuner to tuner).

voltage	frequency MHz
	VHF low band
0.5	50.00 6-meter band
2.0	55.25 channel 2 video
3.5	59.75 channel 2 audio
4.0	61.25 channel 3 video
6.0	65.75 channel 3 audio
7.0	67.25 channel 4 video
9.5	71.75 channel 4 audio
13.5	77.55 channel 5 video
17.1	81.75 channel 5 audio
20.1	83.25 channel 6 video
34.8	87.75 channel 6 audio
	VHF high band
0.5	135.00 air to ground
1.0	144.00 2-meter band
2.0	148.20 commercial paging
4.0	162.55 Buffalo weather
6.5	175.25 channel 7 video
7.6	179.75 channel 7 audio
7.9	181.25 channel 8 video
9.0	185.75 channel 8 audio
9.3	187.25 channel 9 video
10.6	191.75 channel 9 audio
11.0	193.25 channel 10 video
12.3	197.75 channel 10 audio
13.0	199.25 channel 11 video
14.7	203.75 channel 11 audio
15.2	205.25 channel 12 video
17.5	209.75 channel 12 audio
19.0	211.25 channel 13 video
25.5	215.75 channel 13 audio

band we copied about six TV stations from Channel 17 through Channel 26, including a French language Canadian TV station. The Sanyo TV tuner is one super little box with excellent sensitivity — i.e., much better than 1 microvolt. All these stations were copied using only 2-meter antennas.

other uses

Once you become accustomed to using it, the spectrum analyzer is probably the greatest trouble-shooting aid since Volta invented the voltmeter. With the proper probes, attenuators, and converters it can be used as an RF voltmeter; as a signal tracer in transmitters and receivers; and for transmitter alignment, harmonic measurement, deviation measurement, oscillator injection measurement, IF alignment, and spurious radiation measurement, to name but a few of its applications. If you want to dig deeper, Cushman Electronics (2450 North First Street, San Jose, California 95131) publishes a neat little book entitled *Using The Spectrum Monitor* Priced at $7.25 (postpaid), it's easily understood by the average Radio Amateur.

acknowledgement

I wish I could claim authorship for this unique design, but credit goes entirely to my friend, Murray Barlowe, WA2PZO, who not only created the design but has generously made a partial kit of parts, TV tuner, and printed circuit board available to Amateurs at virtually his cost.

For more information send an SASE to Murray Barlowe, WA2PZO, P.O. Box 393, Bethpage, New York 11714. Once you try it, you'll never understand how you got along without it. **ham radio**

Crystal Filters TRIPLE DISCOUNT SALE

The more filters you buy, the more you save! 10% Off on one, 20% on two, 30% on 3 *or more.* For example, one $60 filter costs $54, two $54+48; three $54+48+42; four $54+48+42+42. One $110 filter costs $99, two $88, etc. Figure each price group separately. For combos (matched pairs only) see prices below.

8.83MHz 8-POLE FT FILTERS FOR KENWOOD - Reg. $60 ea.
Bandwidths: CW 250, 400Hz; SSB 1.8, 2.1; AM 6.0KHz. Suitable for all models from TS120 through TS940. TS440S introductory: Take $5 off sale price for two.

Filter Cascading Kits with FT Filter
TS430S - Discounted 2.1 filter *plus* $20 for amp board
TS820S - Discounted 2.1 filter *plus* $5 for parts

455KHz 8-POLE FT FILTERS FOR KENWOOD - Reg. $110 ea.
Bandwidths available: CW 400Hz, SSB 2.1KHz. Suitable for R820, TS830, TS930, TS940. Matched Filter Pairs for Above Models - Reg. $170 ea: SSB: 2.1KHz (455 and 8.83); CW: 400Hz; (455 and 8.83). *Discounted Pairs:* one for $147, $279 for both.

3.395MHz FILTERS FOR TS520, 511, R599 - Reg. $60 ea.
Bandwidths available: 250, 400Hz, 1.8, 2.1KHz. 1.8 special - Take $10 off list, then discount!

Same deal for YAESU, DRAKE, ICOM, and HEATH filters!
Check your GREEN SHEET for List prices, or PHONE.

LIMITED QUANTITIES — ORDER NOW TO AVOID DELAY

When ordering, specify Make and Model Number of your Rig; Frequency and Bandwidth of filter(s) desired.

SHIPPING: $5 US and Canada, $12 elsewhere.
Order by Mail or Phone. VISA/MC or COD accepted.
GO FOX - TANGO—TO BE *SURE!* GET THE BEST—FOR *LESS!*

FOX-TANGO Corp. Box 15944, W. Palm Beach, FL 33416
Telephone: (305) 683-9587

1986-87 ARRL REPEATER DIRECTORY

$3 + $2.00 shipping and handling

Send $5.00 to:
Ham Radio's Bookstore
Greenville, N. H. 03048

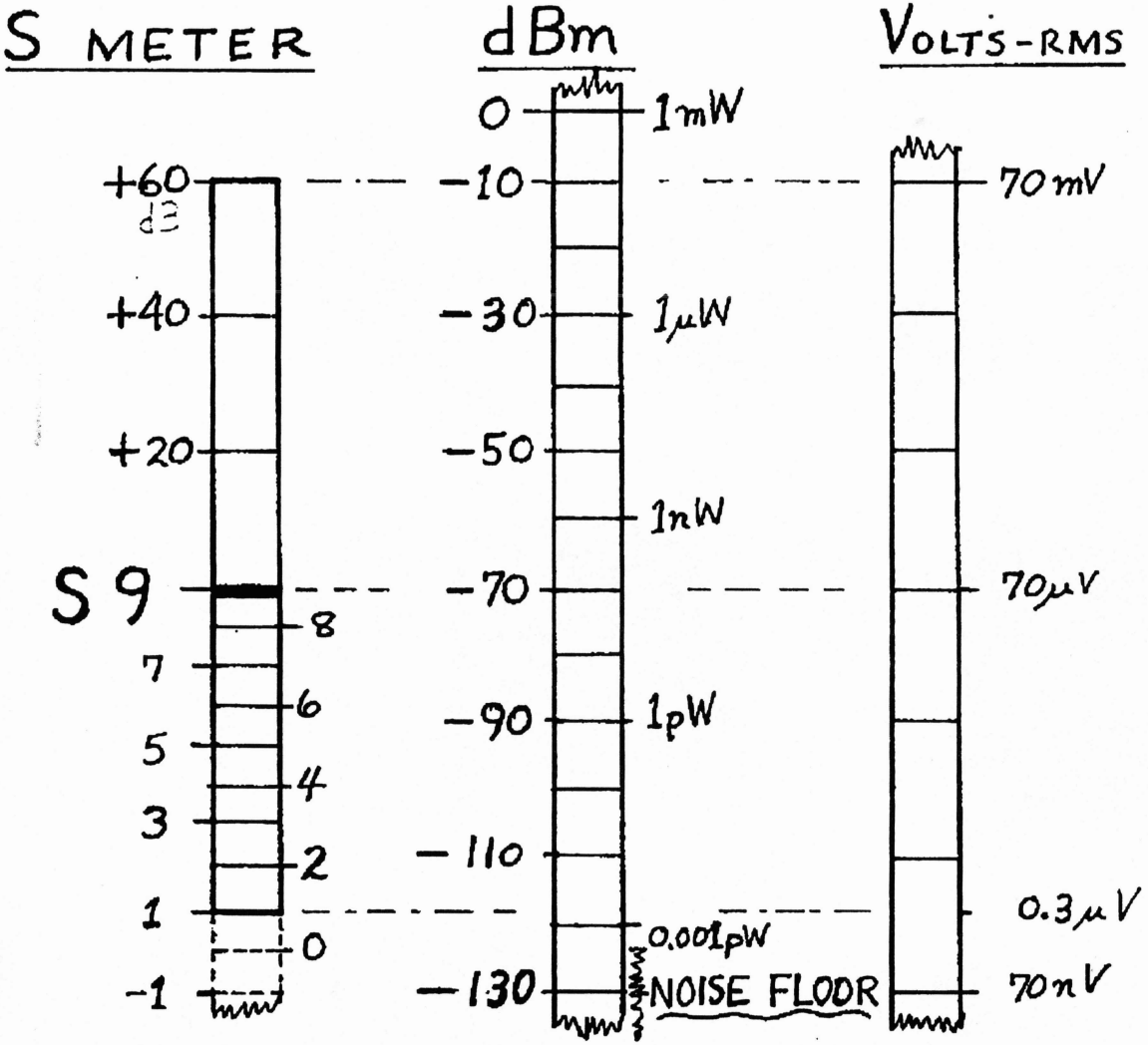

COMPARISON OF S-METER SCALE WITH dBm AND μV

©W2CVI-5/22/88

PRACTICALLY SPEAKING ... Joe Carr K4IPV

building the "poor man's spectrum analyzer"

In September 1986 an exciting article on spectrum analyzers appeared in *ham radio* ("Low-Cost Spectrum Analyzer With Kilobuck Features," page 82). Having been in both communications servicing and engineering school, I'd used spectrum analyzers, but never owned one. (Most professionals can't afford them.) I once considered purchasing a plug-in spectrum analyzer to fit our existing biomedical electronics laboratory oscilloscope mainframe, but it cost over $12,000! Then came W4UCH and his article on the very affordable WA2PZO/Science Workshop "Poor Man's Spectrum Analyzer."[1] I decided to build my own spectrum analyzer.

The WA2PZO concept is based on the fact that modern TV tuners, especially the "cable-ready" variety, are varactor-tuned. The familiar switched inductor tuner is replaced by a voltage-tuned varactor oscillator. Two types are available: one, which was used in the W4UCH article, has separate low-VHF, high-VHF, and UHF bands. A switch is used to select band coverage. The second is a wide-range "cable-ready" tuner that tunes from low VHF through UHF television bands in one 0-35 volt (some are 0-30 volt) range. Obviously, if you can modulate the tuning voltage with a sawtooth waveform (see "Practically Speaking," January, 1987, page 89), then you have a swept tuner. Demodulate its amplified i-f output and display it on a 'scope, and you have a spectrum analyzer. Sheer genius! I bought both forms of tuner from Science Workshop; **fig. 1** shows the cable-ready, wide-range model.*

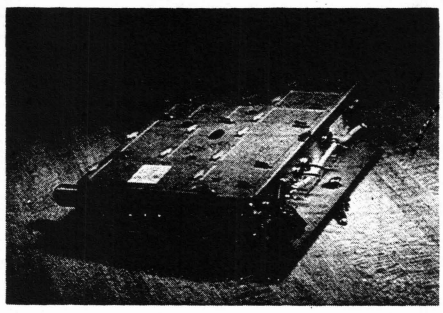

fig. 1. Wide range, L-VHF/H-VHF/UHF, voltage-tuned "cable ready" TV tuner used by the author.

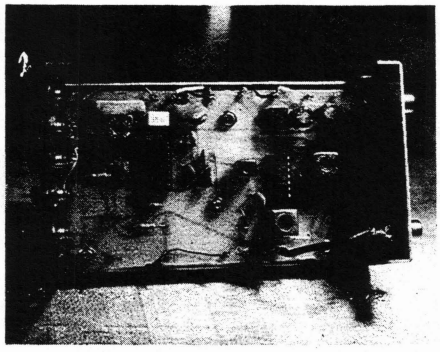

fig. 2. WA2PZO/Science Workshop i-f board built into shielded box.

*WA2PZO, *Science Workshop*, P.O. Box 393, Bethpage, New York 11714

The i-f board used in the W4UCH article and sold by Science Workshop is shown in **fig. 2**. The term "i-f" used here actually means a fixed frequency, single-conversion superheterodyne fm receiver tuned to 45.75 MHz (the tuner's i-f output frequency), and down-converted to the standard 10.7 MHz used for fm receiver i-f amplifiers. Because the i-f strip is actually a single-conversion receiver, the overall spectrum analyzer is a dual-conversion superhet. In fact, it can be used as a VHF receiver if the sweep is turned off (see *Sweep On/Off* in **fig. 3**).

The literature that came with the i-f board suggested that it be well shielded, and that feedthrough capacitors be used on all leads except the i-f input. The shielded enclosure is a standard chassis box with foldover flanges. Beware of many "shielded boxes" now on the market. The flanged type shown in **fig. 2** is minimally acceptable for shielded projects. The type of box that doesn't have overlapping flanges isn't acceptable at all. Some LMB boxes use little dimples on each edge for support; so they won't provide adequate shielding for most rf projects. While they're fine for audio and DC projects, they leave a great deal to be desired at rf.

Being an "older guy" in radio, I still called the feedthrough capacitors by that name and had a difficult time finding them locally; it seems that they're now called "EMI filters." Luckily, a local number for Newark Electronics was listed in the Yellow Pages, so I was

able to buy them directly from the source called for in the article.

In retrospect, "next time" I might try using a single connector for all leads other than the i-f, and 0.002-μF disk ceramic capacitors on each lead at the connector. A good chassis-mounted connector costs about $5 (or less), and high quality disk capacitors cost only about 80 cents each and even less per unit in bargain packs. The EMI filters called for in the article are about $4 each; about 12 are required.

adding a sweep circuit

A significant problem with the W4UCH article for many readers is the lack of a sawtooth circuit. W4UCH used the sawtooth output of his Heath OL-1 oscilloscope to sweep the tuner. That approach works if your oscilloscope provides this waveform. But modern oscilloscopes rarely have the sawtooth available on the front or rear panels. Also, many don't have a horizontal input. Look at your own oscilloscope's front panel. Some two-channel oscilloscopes have an "X-Y" mode on the vertical selector. If yours does, then one of the vertical channels can be re-configured as a horizontal channel at the flick of a switch.

If you don't have a horizontal input, or X-Y capability, you can still build the "Poor Man's Spectrum Analyzer" if you have either an "EXTERNAL TRIGGER" input (most 'scopes do) or a "TRIGGER GATE" output. The former allows an external signal, such as the falling edge of an external sawtooth, to trigger the sweep. The latter outputs a narrow pulse every time the oscilloscope triggers. By allowing the 'scope to self-trigger, you get a string of pulses that can be used to trigger certain types of sawtooth generators.

Science Workshop makes a board available (**fig. 3**) that can be used for generating and controlling an external sawtooth. Although it suffices at this point, I'm not totally happy with the design. As I see it, there are two problems (see **fig. 4**): first, the sawtooth isn't very linear (see **fig. 4A**), and its fall time is too long. Second, the sawtooth clips at various settings of the center frequency and sweep rate controls. Perhaps in the future I'll find time to re-design these circuits, but for now the sawtooth board is satisfactory.

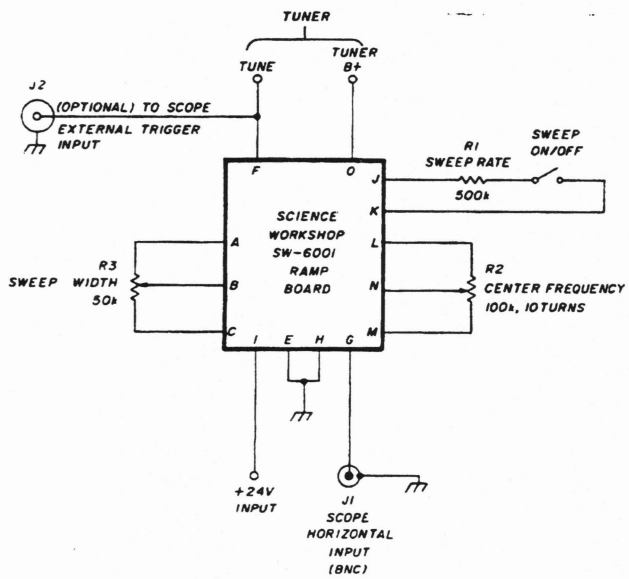

fig. 3. Sweep board SW-6001 connections (available from Science Workshop).

dc power supply

The Poor Man's Spectrum Analyzer requires a two-voltage, single-polarity dc power supply: +12 VDC and +24 VDC. The schematic diagram of a power supply that meets these requirements is shown in **fig. 5**.

I used a pair of small 12.6-VAC transformers (T1 and T2), with the primaries connected in parallel and the secondaries connected in series, to obtain the required voltage. I used available components — a pair of brand-new *Radio Shack* pc-mount transformers. You can use instead either a 25.6-VAC transformer or a dual-secondary transformer stocked by Digi-Key,* Dick

*Digi-Key Corporation, P.O. Box 677, Thief River Falls, Minnesota 56701.

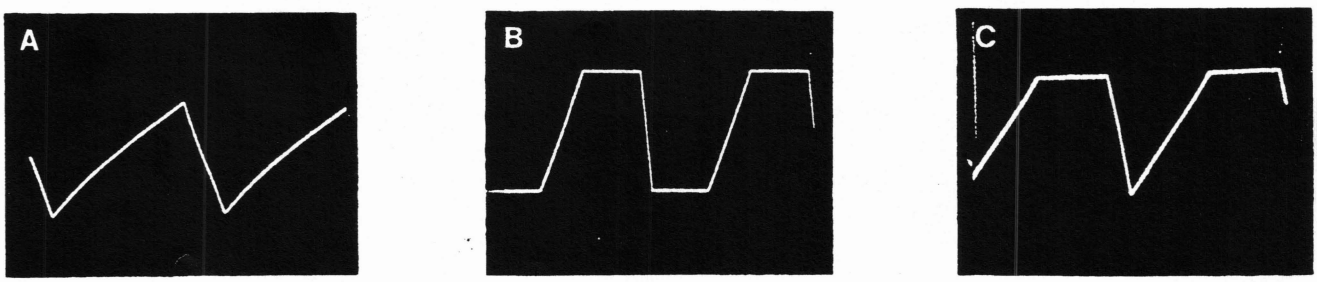

fig. 4. Waveforms from SW-6001: (A) Mid-range sawtooth; (B) and (C) are sawtooths taken at extremes of CENTER FREQUENCY and SWEEP RATE controls.

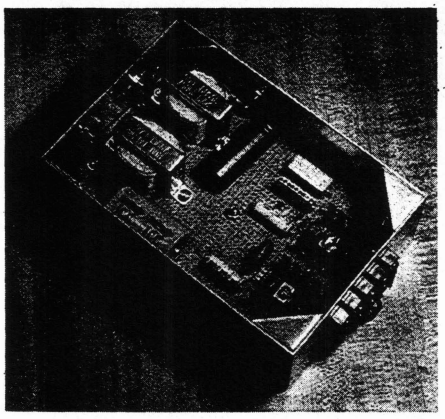

fig. 5A. DC power supply: top view of perf-mounted assembly.

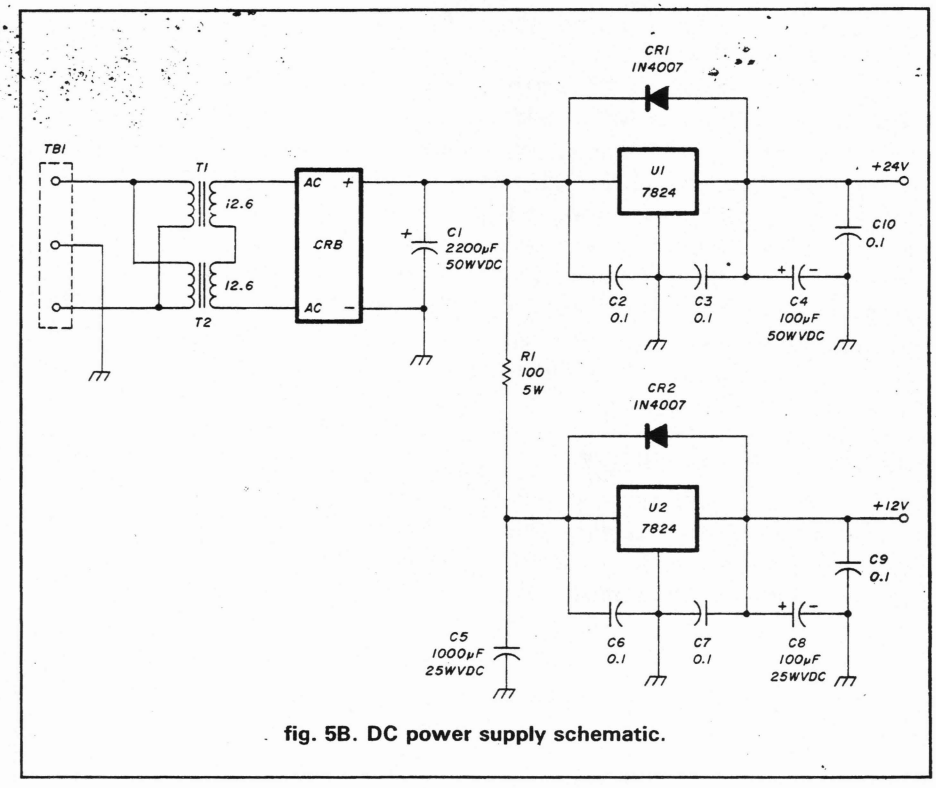

fig. 5B. DC power supply schematic.

Smith Electronics,** and other distributors. The current requirements for this project aren't critical, so almost any transformer with a rating of 300 mA or more is acceptable.

Two three-terminal IC regulators are used in this project. The 7824 (also usable: LM-340T-24) provides the needed +24 VDC, while a 7812 (or LM-340T-12) provides the +12 VDC. Both regulators are standard, but I found that the 7824 was a little hard to find locally. The NTR line of replacement semiconductors, stocked by many local distributors, carries a good replacement number.

There's nothing critical about the parts layout, and perf board can be used for construction. The diodes (CR1 and CR2) are used to prevent the charge in the output capacitors from damaging the voltage regulators at turn-off. Don't delete them, even though you may see many circuits using these regulators without charge dump diodes. The shielded construction and the 0.1-μF output capacitors are needed because one might be using this device in close proximity to a high-power transmitter. The capacitors must be mounted on the output terminal, or at least as close as physically possible.

performance

Figure 6 shows an oscilloscope photo of the spectrum analyzer display. The center frequency was adjusted to the low end of the fm broadcast band. The large center spike is the signal from my Measurements Model 80 signal generator set to approximately 85 MHz. The small spike to its right is WAMU-FM (88.5 MHz), my favorite public radio station; the other spikes are other fm band signals. The large signal barely visible on the left side is, I believe, Channel 5 TV in Washington, DC.

Those who don't have a horizontal input must use the sawtooth to trigger the sweep through the EXTERNAL TRIGGER input. I recommend using the negative trailing edge of the sawtooth waveform for this purpose (set TRIGGER SLOPE — or equivalent switch — to the negative position). Also, be sure to make the sweep time across the entire horizontal aspect of the 'scope graticule equal to the period of the sawtooth leading edge. Otherwise, the 'scope and sawtooth won't sweep in sync.

future projects

The spectrum analyzer project has given me a few ideas for changes or improvements. First, I plan to redesign the sawtooth generator (possibly generating the sawtooth digitally). Second, I plan to add an amplifier/attenuator based on Mini-Circuits fixed attenuators and a Signetics NE-5205 amplifier.[1] The range will be -60 to +19 dB. Third, there may be a converter for hf, and tuners to band-limit the spectrum analyzer at will to certain VHF Amateur bands. This modification will punch out certain local signals that tend to drive receivers into intermod problems at my QTH. Fourth, WA2PZO is working on a tracking oscillator circuit, and in fact has a tentative approach to its design. A tracking oscillator produces an output at the spectrum analyzer's center frequency. Besides its obvious use as a signal source, it's also useful for driving a frequency counter. Presently, tuning indication is by seat-of-the-pants calibration of the voltage control. I plan to buy the WA2PZO tracking oscillator kit if, and when, it becomes available.[3]

Varactor tuners are inherently nonlinear in their voltage-vs-frequency

**Dick Smith Electronics, P.O. Box 8021, Redwood City, California, 94063-8021.

* FEATURES *

PROCESSORS	8088 16 BIT 4.77MHZ PROCESSOR OPTIONAL 8087 MATH CO-PROCESSOR
MEMORY	256K RAM EXPANDIBLE TO 640K DIRECTLY ON MOTHER BOARD
DISK DRIVES	2 D/S DD FLOPPY DRIVES 360K
KEYBOARD	DELUXE KEYBOARD LED INDICATORS
SYSTEMS	MS-DOS CPM-86 PC-DOS ZENIX BASIC
SOFTWARE	RUNS FLIGHT SIMULATOR DBASEII FRAMEWORK SYMPHONY RBASE LOTUS 123 WORDSTAR PFS FILE ETC.
OPTIONAL	20 OR 30 MEG HARD DRIVE AUTO/BOOTING
DISPLAY	COLOR RGB OR COMPOSITE MONO
PRINTER	CENTRONICS PRINTER PORT

* 135W POWER SUPPLY * 30 DAY WARRANTY *

COMPATIBLE COMPUTER

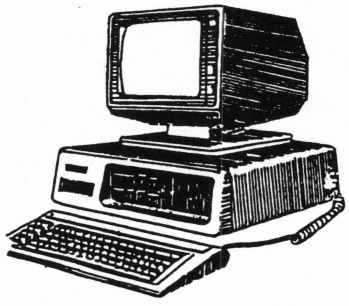

$599.00

* 2 FLOPPY DISK DRIVES
* COLOR GRAPHICS CARD
* 8 EXPANSION SLOTS
* PRINTER PORT
* 256K RAM MEMORY

MONITOR NOT INCLUDED

WE ALSO STOCK THE FOLLOWING ITEMS

MEMORY CHIPS	*CONNECTORS*
TTL CHIPS	*TRANSFORMERS*
CMOS CHIPS	*SWITCHES*
LINEAR CHIPS	*CAPACITORS*
TRANSISTORS	*RESISTORS*
DIODES	*METERS*
LEDS	*BREADBOARDS

AZOTIC INDUSTRIES
2026 W BELMONT
CHICAGO ILL 60618
312-975-1288

VISIT OUR RETAIL STORE

✓ 180

Iron Powder and Ferrite
TOROIDAL CORES

Shielding Beads, Shielded Coil Forms
Ferrite Rods, Pot Cores, Baluns, Etc.

Small Orders Welcome
Free 'Tech-Data' Flyer

AMIDON Associates Since 1963

12033 Otsego Street, North Hollywood, Calif. 91607

In Germany Elektronikladen, Wilhelm — Mellies Str. 88, 4930 Detmold 18, West Germany
In Japan Toyomura Electronics Company, Ltd. 7-9, 2-Chome Sota-Kanda, Chiyoda-Ku, Tokyo, Japan

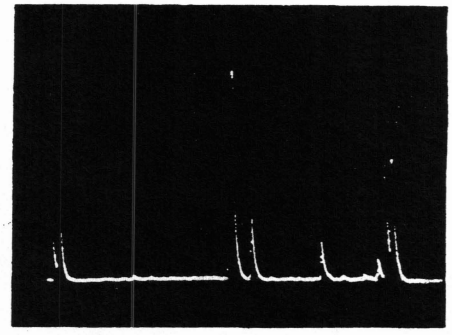

fig. 6. FM broadcast band signals from my spectrum analyzer project. Central spike is a signal generator on 85 MHz (± 25-year-old dial calibration).

characteristic and the resulting curve looks parabolic in shape. Digitally generating the sawtooth signal is a worthwhile consideration. If you want to try it yourself, write to me and I'll send you a brief on the method. (Please enclose a No. 10 SASE.) A very brief discussion of the digital linearization method is given on pages 300-302 of my book, *How to Design and Build Electronic Instrumentation*.[2] Although my method is based on discrete logic circuits, it can easily be applied to digital computers should you want to provide computer control of your spectrum analyzer.

conclusion

WA2PZO deserves accolades (and our business) because of the Poor Man's Spectrum Analyzer project, which offers opportunity for experimentation in areas previously closed to Amateurs solely for reasons of cost. If you have an idea for its use, a new or different modification, or a particularly well-built version of the W4UCH/WA2PZO project, send me the details.

references

1. Michael E. Gruchalla, "NE-5205 Wideband RF Amplifier", *ham radio*, September, 1986, page 30.
2. Joe Carr, K4IPV, *How to Design and Build Electronic Instrumentation*; Second Edition, Tab Books, Blue Ridge Summit, Pennsylvania 17214. ($17.95 from the author, publisher, or Ham Radio's Bookstore, Greenville, New Hampshire 03048. Add $3.50 shipping and handling for HR Bookstore orders.)
3. For ideas on building your own, see also Wayne Ryder's "Spectrum Analyzer Tracking Generator," *ham radio*, September, 1978, page 30.

ham radio

9/87 Ham Radio mag

PRACTICALLY SPEAKING ... Joe Carr K4IPV

revisiting the "poor man's spectrum analyzer": digitally generating sawtooth (and other) waveforms

In the March, 1987 column we discussed the "Poor Man's Spectrum Analyzer," which I built from an article published by W4UCH.[1] The design was originally put together by Murray Barlowe, WA2PZO, of Science Workshop.[2] In that column I mentioned that the sawtooth generated for that project left something to be desired, and offered a digitally generated improved sawtooth generator design to anyone who sent me a No. 10 SASE. Nearly 30 people wrote to me either via *ham radio*, my old callbook QTH, or my new QTH (see end of this article). As a result, I've decided to publish that circuit here. The response to my offer delighted me because it indicates that the doomsayers are wrong: Amateur construction is not dead!

Figure 1 shows part of the problem with the original sawtooth generator circuit. In my previous column on this subject, I showed several different sawtooth waveforms that were worse than **fig. 1**; this version is the *best* case. The waveform has two defects which adversely affect the operation of the spectrum analyzer. First, the rising ramp part of the sawtooth isn't linear. Because the original design was a capacitor charge/discharge circuit in the form of a Miller integrator, the ramp naturally has a shape like the normal capacitor charge waveform. What's required of a proper sawtooth is a linear ramp. The second defect is the fall-time: it's too long. Use of a few low-cost digital components produces a better sawtooth waveform.

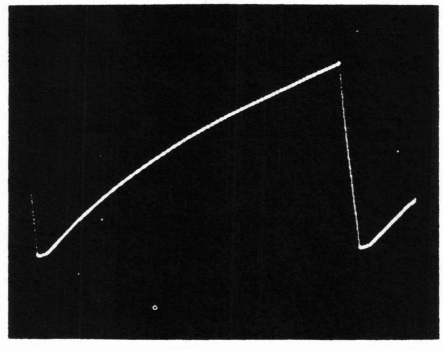

fig. 1 Best waveform available from the sawtooth generator.

The circuit for the new sawtooth generator is shown in **fig. 2**. The heart of this circuit is U1, a DAC0806 eight-bit digital-to-analog converter (DAC). This DAC, based on the Motorola MC-1408 family of DACs, was selected because it's well behaved and available through mail order sources such as Jameco Electronics[3] or in blister packs through Jameco's local distributor line of *Jim-Paks*.

A DAC produces an output voltage that is proportional to the reference voltage or current and the binary word applied to its digital inputs. The transfer function of this DAC is:

$$I_o = I_{REF} \cdot \frac{A}{256} \qquad (1)$$

where:

I_O is the output current from pin 4;

I_{REF} is the reference current applied to pin 14, and

A is the decimal value of the binary word applied to the eight binary inputs (pins 5-12).

The reference current is the reference voltage divided by the series resistor value at pin 14. In data systems the reference voltage is a precision, regulated potential. But in this case we don't need that precision, so we can use the V+ power supply as the reference voltage. Therefore, the reference current is (+12 Vdc)/R4. With the value of R4 shown (6800 ohms), I_{REF} is 0.0018 amperes, or 1.8 mA. Values from 500 μA are permissible with this device. If you elect to change the reference current, be sure to keep R4 equal to R5.

The reference current sets the maximum value of output current, I_O. When a full-scale binary word (11111111) is applied to the binary inputs, the output current I_O is:

$$I_o = (1.8\ \mu A) \cdot \frac{255}{256} = (1.8\ \mu A) \qquad (2)$$

$$\cdot (0.996) = 1.78\ \mu A$$

the DAC0806 is a current output DAC, so we must use an op amp current-to-voltage converter in order to make a sawtooth voltage function. A circuit that accomplishes this is an ordinary

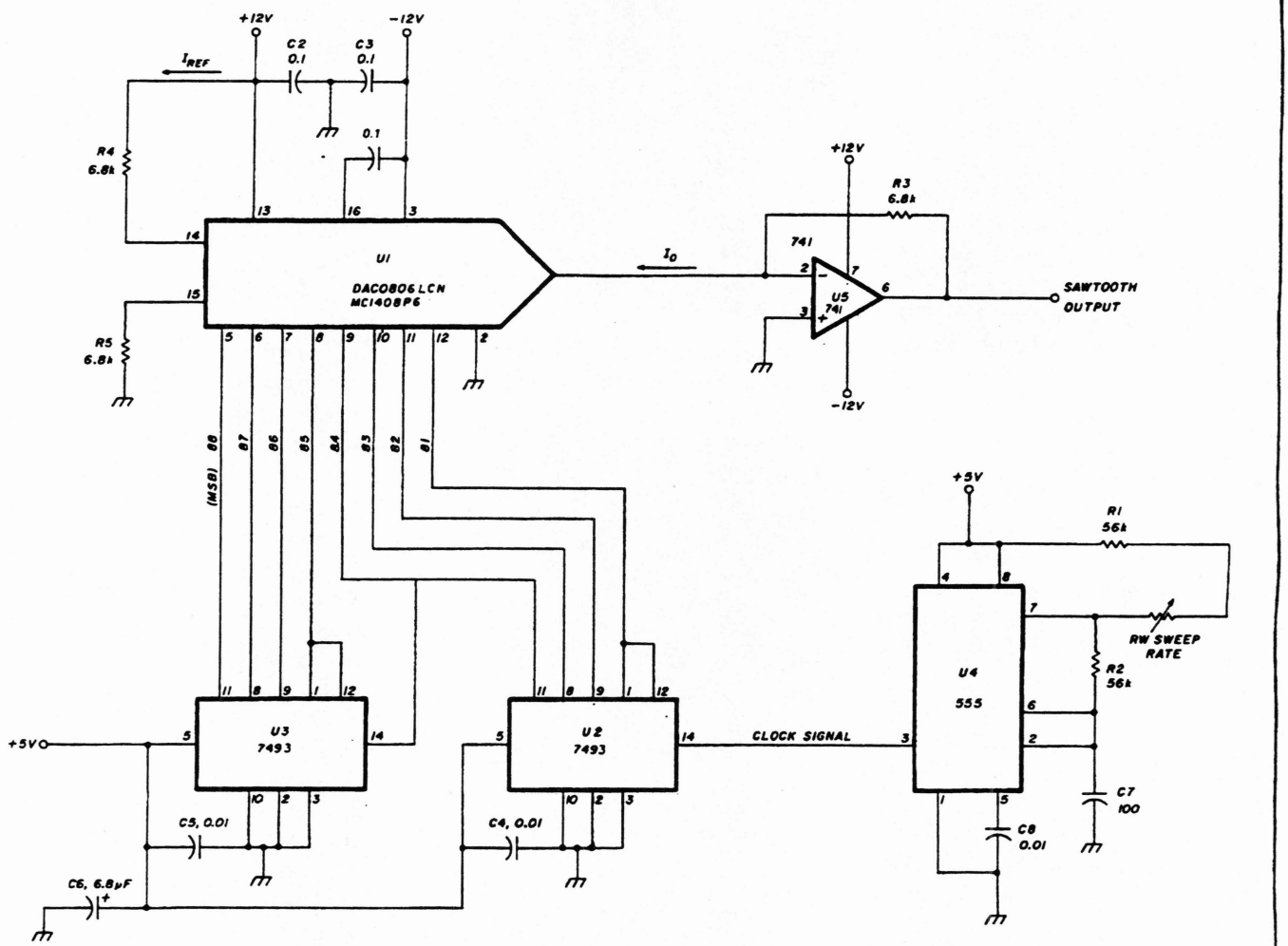

fig. 2. Digital sawtooth generator circuit.

inverting follower without an input resistor. The output voltage (V_O) will rise to a value of (I_O × R3).

The waveform produced by this circuit is shown in **fig. 3**. This waveform has a period, T, of about 5 ms (1/T = 200 Hz), and an amplitude of about 5 volts. In **fig. 3A**, notice that the falling edge is too fast for the oscilloscope camera to photograph (contrast this with the **fig. 1** waveform). The leading edge of this latter waveform also represents an improvement. An expanded view of the positive-going ramp is shown in **fig. 3B**.

The actual output waveform is a staircase of binary steps, each equal to the 1-LSB (Least Significant Bit) current of U1 (or the 1-LSB voltage of V_O). The 1-LSB voltage is the smallest step change in output potential caused by changing the least significant bit (B1) either from 0 to 1, or from 1 to 0. You don't see it in **fig. 3** because the frequency response of the 741 operational amplifier used for the current-to-voltage converter acts as a low-pass filter to smooth the waveform. If a higher frequency op amp is used, then a capacitor shunting R3 will serve to (low-pass) filter the waveform. Although I haven't tried other op amps in this application, I suspect a -3 dB frequency (*f*) of 1 or 2 kHz will suffice to smooth the waveform. The value of the capacitor is calculated from:

$$C = \frac{10^6}{6.28\ R3 \cdot f} \qquad (3)$$

where:

C is the capacitance in microfarads;

f is the −3-dB cutoff frequency in Hz;

R3 is expressed in ohms.

This circuit is synchronized by a clock oscillator consisting of a single 555 IC timer. Although not a TTL device, the 555 is TTL-compatible when the V+ potential applied to pins 4 and 8 is limited to +5 Vdc. The 555 is connected in the astable multivibrator configuration and generates a +4 volt amplitude series of pulses. The operating frequency is set by three resistors (R1, R2, and RW) and capacitor C7. The actual frequency is:

$$f = \frac{1.44}{((R1 + RW) + 2R2)\ C7} \qquad (4)$$

where:

f is the frequency in Hz;

C7 is in farads;

R1, R2 and *RW* are in ohms.

Select a clock frequency that is 256 times the desired sawtooth sweep frequency. For most spectrum analyzer projects the sweep frequency range will be 10 to 200 Hz. Slower rates make viewing on the CRT screen difficult, while faster rates may tend to "ring" the bandpass filter used in the i-f amplifier section.

waveform selection

As electronic music buffs will testify, we can get almost any waveform we need by applying the right binary words to the digital inputs of the DAC0806. Because I wanted a sawtooth waveform, the DAC inputs were connected to the outputs of an eight-bit binary counter built from a pair of 7493 TTL base-16 counter chips. Each chip is a four-bit counter, so they are cascaded to produce the eight-bit binary word needed to drive the DAC. If you want a detailed description of this chip, I recommend Don Lancaster's book *TTL Cookbook*.[4] The function of this counter is to increment in steps from 00000000 to 11111111 under control of a clock signal applied to the input (pin 14) of U2. You could use any eight-bit counter that outputs a TTL-compatible signal in place of the 7493 devices that I selected. The 7493 was chosen for the best of all engineering reasons: I had a pair of them in my junkbox.

If you want a triangular waveform, then it's possible to replace the 7493 devices with a base-16 up/down counter chip. Arrange the digital control logic to reverse the direction of the count when the maximum state (11111111) is sensed.

There are two ways to generate waveforms other than a sawtooth or triangle, and both of them involve using computer memory. The binary bit pattern representing the waveform, and then output in the right sequence, are stored in memory. One method uses a ROM that you pre-program with the bit pattern. A binary counter circuit connected as an address generator selects the bit pattern sequence. The second method stores the bit pattern in a computer, then outputs it under program control via an eight-bit parallel output port. This method is usable for both generating special waveforms and for linearizing the tuning characteristic of the spectrum analyzer.

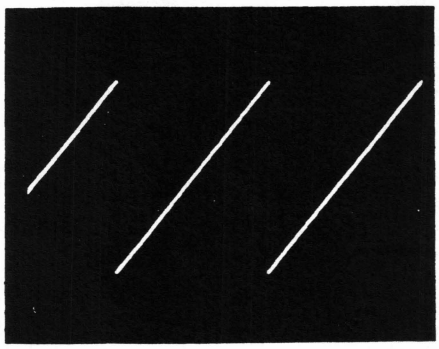

fig. 3A. Waveform from the digital sawtooth generator: three successive waves.

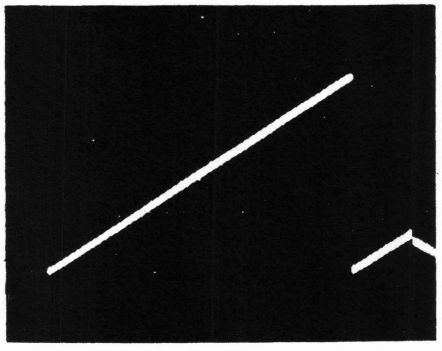

fig. 3B. Waveform from the digital sawtooth generator, expanded to show greater detail.

The varactor TV tuner that forms the basis of this project has a nonlinear voltage vs. frequency characteristic. This is due to both the nature of varactor diode voltage vs. capacitance curves, and to the fact that the change of frequency in an LC tank circuit is proportional to the square root of the change in capacitance. For this reason I suspect that the actual mathematical function of the curve is basically parabolic (i.e., it looks as if it might approximate a quadratic "$aX^2 + bX + c$" function).

There are a couple of methods that can be used for the linearization process. First, the analog method involves the use of an XY/Z analog multiplier divider circuit (a special IC). These devices can be connected as a "square rooter" stage. There are two problems with this: first, that the values of the constants must be determined (which is not so easy) and second, that many of these ICs tend to be either expensive or temperamental, especially to changes in temperature. However, there is a digital solution.

The digital solution to the linearization problem involves storing a look-up table in either a ROM or computer memory. I learned this system in a medical electronics laboratory where it was once used to linearize low-level pressure transducer measurements. **Figure 4** shows a generic version for a voltage that represents some parameter P, which in our case might be the frequency of the spectrum analyzer local oscillator. The actual nonlinear curve could be any shape, including parabolic, while the "ideal" curve is a linear function $Y = mX + b$, where $b = 0$. The idea is to measure the ideal voltage (which in our case is generated by the sawtooth or tuning control) with an A/D converter, and then output a binary word to a DAC that represents the actual required voltage. For example, at point P1 the ideal voltage is 0.9 Vdc, while the actual voltage is 0.68 Vdc. When the computer senses an ideal voltage of 0.9, it creates an actual voltage of 0.68 in order to drive the tuning to the correct frequency.

Another concept is to go all digital, except for the DAC that creates the actual tuning voltage. We could, for example, divide the spectrum up into N segments and store the binary codes for the correct tuning voltages in memory for each discrete point. The value of N corresponds to the bit length of the DAC. **Figure 5** shows a simplified block diagram of such a system. Tuning is controlled by a clock that drives the binary counter. The N-bit binary word output from the counter is routed to the address pins on the ROM. Contained in the ROM is the bit pattern for each of the 2^N discrete vol-

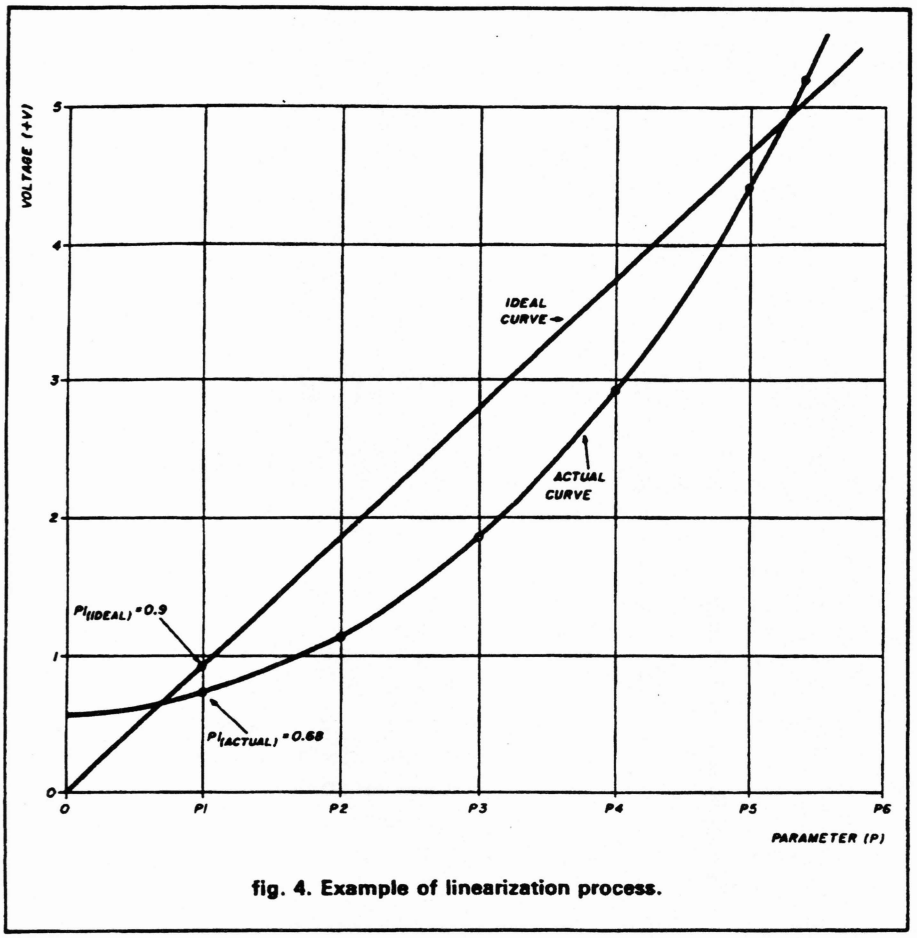

fig. 4. Example of linearization process.

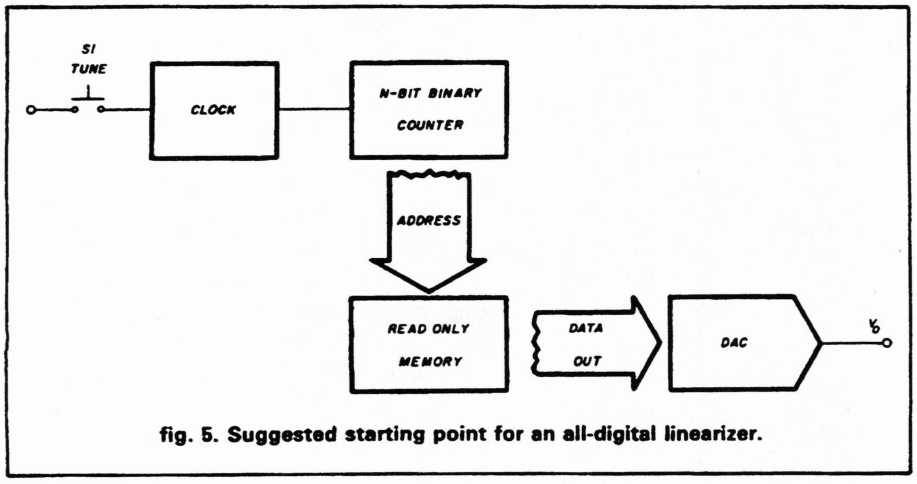

fig. 5. Suggested starting point for an all-digital linearizer.

tages that can be generated by the system. The correct binary word corresponding to this calibrated discrete potential is routed to the DAC, which generates the correct voltage. I haven't developed this circuit, but suspect that it wouldn't be too difficult once an accurate and correct voltage vs. frequency chart is known for any given tuner (that curve is the source of the data that is contained in the ROM).

a note from WA2PZO

After my initial column on this topic appeared, WA2PZO sent me a note on the feedthrough capacitors used in the project. (I had complained about the high cost, but have since learned that Dick Smith Electronics[5] stocks them for less than 50 cents each.) Murray informs me that he no longer advises bypassing *all* of the leads because the capacitance tends to integrate the waveform, makes the receiver less usable as a monitor receiver, and introduces a little instability. If you installed bypass capacitors on the leads into the shielded i-f box, remove all of them except the one on the +12 Vdc regulated power supply line.

One reader wrote about an "inverted scope image" problem, which I am at a loss to describe. If anyone has had this problem and solved it, then please pass the solution on to me and I'll pass it on to the affected reader. If it's of sufficient interest, perhaps we'll find space to cover it in a future issue.

WA2PZO now has a tracking generator kit available for the "Poor Man's Spectrum Analyzer." It consists of a modified tuner and some extra parts that go on the SW-6006 i-f board. Write to him for details. In the meantime, I'm planning to build it and evaluate it in this space sometime in the future. I don't want to devote much space to this project because of all the other pressing issues that interest readers . . . but a tracking generator has definite possibilities!

references

1. Science Workshop, Box 393, Bethpage, New York 11714.
2. Robert M. Richardson, W4UCH, "Low-Cost Spectrum Analyzer with Kilobuck Features," *ham radio*, September, 1986, pages 82-90.
3. Jameco Electronics, 1355 Shoreway Road, Belmont, California 94002. (Catalog available for $1.00 postage and handling.)
4. Donald Lancaster, *TTL Cookbook*, Howard W. Sams & Co., Inc. Available from Ham Radio's Bookstore, Greenville, New Hampshire 03048; $14.95 plus $3.50 shipping and handling.
5. Dick Smith Electronics, P.O. Box 2249, Redwood City, California 94064. (148-page catalog available for $1.00 postage and handling.)

Joe Carr, K4IPV, can be reached by mail at P.O. Box 1099, Falls Church, Virginia 22041.

Low-cost
direct frequency display
for any receiver

add a digital readout to the "poor man's spectrum analyzer"

An article in the September 1986 issue of *ham radio*, "Low-cost Spectrum Analyzer with Kilobuck Features" by W4UCH, illustrated the use of a voltage-tuned (varactor) TV tuner as a swept, tuned filter. I wanted to add a circuit that would directly read out the center frequency of the CRT display.

The unusually high i-f frequency (610 MHz) used in the modified cable TV tuner makes this application different from the usual Amateur receiver digital readout. Typical receiver i-f frequencies are relatively low: 455 kHz; and 4, 9, 10.7, and 21.4 MHz. Expansion of activity into the VHF, UHF, and microwave bands is forcing receiver designers to use much higher i-f frequencies to reduce image problems.

My solution is an inexpensive circuit combining both digital and analog circuitry, which simplifies the task of accommodating a wide range of i-f offset frequencies. While the circuit was developed specifically for the "Poor Man's Spectrum Analyzer", it can be used for any other type of receiver. A simple potentiometer adjustment is all that is needed to accommodate any i-f frequency from zero to hundreds of MHz.

previous approaches to the problem

Most frequency readout circuits use the local oscillator signal to generate the display. Because this signal is offset from the incoming rf signal by an amount equal to the i-f frequency, some arithmetic must be performed to either add or subtract the i-f from the LO signal to get back to the received frequency. The biggest problem with other "universal" frequency displays has been the circuitry required to offset the display of the receiver's local oscillator frequency by the i-f frequency. Heterodyne oscillators or presetting counters had to be used to add or subtract the i-f, or games had to be played with the timebase to accomplish the same result. None of these methods provided a very satisfactory solution.

the numbers involved

The varactor tuner used in the spectrum analyzer is a cable tuner modified to tune from 0 to 500 MHz as the tuning voltage is varied from 0 to 24 volts. The incoming signal is upconverted to 610 MHz in the tuner by mixing it with a voltage-controlled oscillator (VCO), which is varied from 610 MHz to 1110 MHz. This VCO signal is also fed to a prescaler in the tuner which divides it by 256. The output of the prescaler is a signal that swings from 2.38 MHz (610 divided by 256) to 4.34 MHz (1110 divided by 256) as the tuner tunes from 0 to 500 MHz. This signal is brought out to a terminal on the side of the tuner and is the signal that I had to work with to create my direct digital frequency display.

To analyze how the circuit works, I stopped the sweep, picked a single input frequency, and followed it through to the display (see **fig. 1**). I tuned to 100 MHz. Because the tuner upconverts to 610 MHz, the VCO must operate at 610 MHz above or below 100 MHz. In this tuner it operates above the incoming signal, so it is oscillating at 710 MHz. The prescaler divides this 710 MHz signal by 256, producing an output of 2.77 MHz. Now the 2.77 MHz number must be converted to display 100 on the digital readout.

Multiplying this 2.77 number by 256 reverses the action of the divide-by-256 prescaler and returns it to the local oscillator frequency. A conventional counter could then be used to display this frequency, but the

By Murray Barlowe, WA2PZO, P.O. Box 310, Bethpage, New York 11714

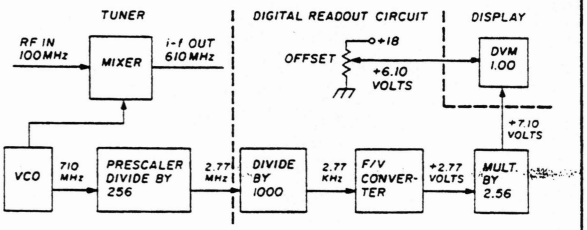

fig. 1. System block diagram.

resulting display would always be 610 MHz higher than the actual frequency. I would then have to subtract 610 from the number displayed to determine the actual center frequency or build an offset counter with dip switches to preset the i-f frequency offset. I didn't care for either of these methods. The first was too inconvenient, and the second was too expensive and limited.

I wondered how the new state-of-the-art receivers display the received frequency. A little investigation revealed that they were all synthesized and used microprocessors to provide the data for the display.

must the solution be "digital only"?

A friend, KA2TCH, mentioned that some voltage-to-frequency converter chips could also be run as frequency-to-voltage converters. Looking through the data books, I found a Precision V/F converter chip (LM-331) that would also work as an F/V converter. However, the data sheet disclosed that 10 kHz was the highest input frequency it could accept. I figured I could do something about that. Breadboarding the circuit proved that it really worked as advertised. A plot of the input frequency versus the output voltage illustrated its excellent linearity. The result was a simple, precise one-chip frequency-to-voltage converter.

Since the output of the prescaler as it is tuned from 0 to 500 MHz is approximately 2 to 4 MHz, dividing it by 1,000 brings it down to 2 to 4 kHz. This fits well into the input frequency range of the F/V converter. I chose to use a pair of dual decade divider chips (74LS390) to perform this function. Each chip contains two divide-by-2 and two divide-by-5 circuits. Cascading all the circuits in each chip provides a divide-by-100 result. As division by 1,000 was required, the first chip was connected to divide by 100, and only half of the second chip was used to divide by 10. These two chips were added in front of the F/V converter, and sure enough, the 2 to 4 MHz input from the prescaler produced 2 to 4 volts dc out of the F/V converter.

more breakthroughs

At this point, I could use a digital voltmeter as a digital frequency display. This saves the cost and inconvenience of building a LED or LCD decoder, driver, and display circuit. It also has the added advantage of eliminating a serious source of RFI generated by more TTL and multiplexing circuitry that could be picked up by the spectrum analyzer.

recap

The four steps taken so far in the F/V conversion scheme are:

- The incoming 100-MHz signal is upconverted to 610 MHz. This means that the VCO is operating at 710 MHz (rf + i-f = OSC).
- The prescaler divides this 710-MHz signal by 256, producing a 2.77-MHz signal.
- The two counter chips divide this 2.77-MHz signal by 1,000, providing a 2.77-kHz signal for the F/V converter chip.
- The F/V converter chip converts the 2.77-kHz signal to 2.77 volts.

the second half of the process

So far the incoming 100-MHz signal has been converted to 2.77 volts. Now it's time to reverse the process, return to 100 MHz, and display the result.

First, interpret the 2.77-volt reading displayed on the meter as 2.77 MHz — a mental conversion which accomplishes two steps. I performed a voltage-to-frequency conversion (2.77 volts = 2.77 MHz) and then reversed the action of the divide-by-1,000 part of the circuit by accepting the concept that the number 2.77 was in MHz, rather than in kHz (2.77 kHz × 1,000 = 2.77 MHz). This reversed the action of the third and fourth steps in the previous F/V conversion process, bringing us to the second step — the divide-by-256 prescaler.

Now 2.77 volts (representing 2.77 MHz) must be multiplied by a number which will result in 710, the frequency of the VCO in MHz. Since the prescaler divided 710 by 256 to get 2.77, multiplying 2.77 by 256 comes back to 710. This presents a bit of a problem. We are dealing with dc voltages and so 710 volts requires high-voltage power supplies and other high-voltage components. Another mental conversion is needed so that a voltmeter display of 7.10 volts represents 710 MHz. Now the process can be continued with practical voltage levels. Multiply 2.77 volts by 2.56 to get 7.10 volts. A simple direct coupled op-amp with a gain of 2.56 does the job. All that remains is to subtract 610 from 710 to get the original 100-MHz rf input signal.

Since the level of the numbers has been scaled down by a factor of 100, subtract 6.10 volts from 7.10 volts to get 1.00 volt to represent 100 MHz. This 610 represents the i-f offset frequency, which has always been a major problem when designing a universal di-

OnSat

"America's Weekly Guide to Satellite TV"

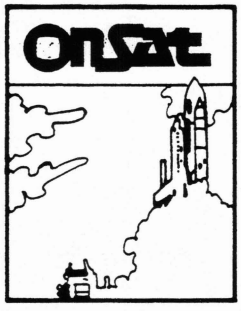

The best in satellite programming! Featuring: ★ Over 120 Channels listed ★ Weekly, Updated Listings ★ Magazine Format ★ Complete Alphabetical Movie Listings ★ Sports Specials ★ Prime Time Grids ★ Specials ★Programming Updates!

- **Only $45.00 per year (52 weekly issues)**
- **2 Years $79.00 (104 weekly issues)**
- **$1.00 for sample copy**

*NC Residents must add 5% Sales Tax

Subscribe Today!

call toll free 1-800-234-0021
Visa® and MasterCard® accepted

OnSat PO Box 2347 Shelby, NC 28151-2347

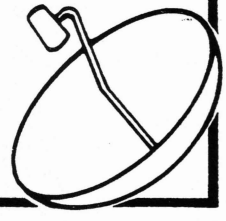

STV GUIDE

The new **STV Guide** contains valuable information on zoning regulations, scrambling, plus technical tips for installing or updating a satellite system—and now a precise monthly guide to satellite TV with the latest program listings for over **90 channels**!

All this in each complete issue of **STV Guide**!

- **Only $48.00 per year (12 monthly issues)**
- **$2.00 for a sample copy**

*NC Residents must add 5% sales tax

Subscribe Today!

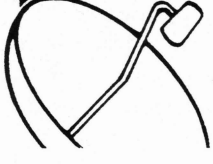

Call toll free 1-800-234-0021
Visa® and MasterCard® accepted

STV Guide PO Box 2384 Shelby, NC 28151-2384

rect digital frequency display. The solution to this last problem is one some of us old-timers, who played with analog computers long before the advent of their digital counterparts, will like. To have a voltmeter read 1.00 volt when the positive terminal is connected to 7.10 volts requires only that the negative terminal of the meter be connected to +6.10 volts. The difference of 1.00 volt now appears across the meter terminals.

Returning the negative terminal of the meter to the center arm of a potentiometer connected across the supply and labeling the control "offset" creates a universal direct digital frequency display (see schematic). A simple adjustment of a potentiometer allows offsetting (subtracting) of any i-f frequency and display of the rf frequency tuned by the receiver. Who said analog computers were obsolete?

display options

I designed this circuit (shown in **fig. 2**) so that it could use your digital voltmeter as the frequency display. With the meter set on the 20-volt dc scale, 0 to 500 MHz would be displayed as 0.00 to 5.00 volts. I found the decimal point annoying at first, but was soon able to ignore it. Later, I bought a $29 digital voltmeter (DVM), disabled the decimal point, and used it in my spectrum analyzer application. Now the display reads out directly in MHz. Miniature DVMs that are ideal for this application are available from Acculex. They measure 1 x 2 x 0.5 inches and mount easily into a rectangular cutout.

For those who would rather use a regular digital frequency counter instead of a digital voltmeter to display the result, a second F/V chip connected as a voltage-to-frequency converter would do the trick. The voltage that was intended for the DVM would now be converted to a frequency that could be read by the counter. However, the 1.00 volt displayed on the DVM and read as 100 MHz would now produce 1.00 kHz on the counter — which would also have to be interpreted as 100 MHz.

displaying the center frequency while scanning

The tuner used in the spectrum analyzer is voltage tuned so that it can be swept across a wide range of frequencies with a sawtooth voltage waveform. This action makes the tuner function as a voltage-tuned filter, which is a key element of a spectrum analyzer. As the tuner sweeps across the band, all signals received are amplified and rectified, and the resulting voltage is applied to the vertical input of a scope. The horizontal sweep of the scope is synchronized with the sawtooth used to cause the tuner to scan, so that the scope display shows a series of vertical "pips", each one representing a received signal. The vertical am-

plitude of the pip is proportional to the strength of the signal, while its location on the horizontal axis represents its frequency.

To simplify the analysis of how the circuit works, I put aside the fact that the local oscillator in the spectrum analyzer was being swept above and below the center frequency by the 20-Hz sawtooth. (This is not a problem for those who would use this circuit in a more conventional receiver.)

The VCO in the spectrum analyzer is constantly changing frequency. It is being swept several MHz above and below the center frequency, approximately 20 times per second, by the sawtooth scanning voltage. The center frequency of the band of frequencies being scanned must be displayed.

One approach used by commercial spectrum analyzers is to use a comparator to sense when the sawtooth is halfway through its scan, open a gate for a millisecond or so, and sample and display the VCO frequency. Then, a counter that has been preset to add or subtract the i-f frequency (depending on whether the VCO is operating above or below the incoming signal) is used to count and display the center frequency. This would require a complete offset digital counter, along with a stable timebase, plus the necessary gating circuits.

My original plan was to add a circuit that would dectect the center of the sawtooth sweep waveform, as in commercial analyzers, and use a sample and hold circuit to save the value of the dc produced by the F/V converter. However, after completing the circuit and using the tuner without the sweep, I realized that this additional circuitry might be unnecessary. The frequency-to-voltage converter uses an RC time constant across which it develops the dc output voltage. I reasoned that if the sawtooth sweep were symmetrical about the center frequency, it would produce a 20-Hz ac component riding on the dc component that represented the center frequency. The average dc voltage would not be changed. In addition, the time constant (1 μF $\times$ 100k) might be large enough to absorb this small ac component. Applying the sawtooth sweep to the tuner proved that my reasoning was correct. The display remains constant unless the sweep width is increased to hundreds of MHz, when it might become unsymmetrical.

constructing the circuit

To simplify construction, the art work for the double-sided pc board is shown in **figs. 3** and **4**. I found it necessary to use a double-sided board with maximum groundplane on both sides to eliminate RFI generated by the two digital chips. Construction is straightforward. All the components are mounted on one side of the board.

A number of test points have been provided for test-

YOUR SHACK

YAESU 747, 757GX, 757GXII, 767, 9600.
KENWOOD TS 140, 440, 940, 680, R5000.
ICOM R71A, R7000, 735, 751A, 761, 781, AND ALL VHF, UHF, CI-V.
DRIVERS FOR RADIOS ARE MODULAR.
JRC NRD 525.

COMPLETE PROGRAM ENVIRONMENT.
MENU DRIVEN AND DESIGNED FOR EASE OF USE.
SCAN FUNCTION ADDED TO RADIOS THAT DO NOT SUPPORT IT.
ERGONOMETRICALLY DESIGNED FOR EASE OF OPERATION.
MOST FUNCTIONS REQUIRE SINGLE KEYSTROKES.
PROGRAM COLOR CODED FOR EASE OF USE, ALTHOUGH WILL STILL RUN IN A MONOCHROME SYSTEM.

MENUS FOR THE FOLLOWING:
AMATEUR HF—AMATEUR VHF— AMATEUR UHF
AM BROADCAST—FM BROADCAST—TELEVISION BROADCAST
SHORT WAVE BROADCAST
AVIATION HF(SSB)—AVIATION VHF—AVIATION UHF
HIGH SEAS MARINE—VHF MARINE
MISCELLANEOUS HF, VHF, UHF
MOST POPULAR FREQUENCIES ALREADY STORED
ADDITIONAL LIBRARIES AVAILABLE
COMPLETE LOGGING FACILITY
ALL FREQUENCY FILES MAY BE ADDED TO, EDITED OR DELETED

AVAILABLE FOR IBM PC, XT, AT, 80386 256K RAM
1 SERIAL PORT AND 1 FLOPPY MINIMUM

PROGRAM WITH INITIAL LIBRARIES	**99.95**
RS-232 TO TTL INTERFACE ONLY (NEEDED IF DON'T HAVE MANUFACTURERS INTERFACE)	
EXTERNAL INTERFACE ALLOWS 4 RADIOS	**99.95**
INTERNAL PC INTERFACE W/1 SERIAL & 1 RADIO PORT	**129.95**
SPECTRUM ANALYZER MODULE	(CALL FOR PRICE)
COMPLETE SYSTEMS INCL. RADIO, INTERFACE, COMPUTER, AVAILABLE	(CALL FOR PRICE)

DATACOM, INT.
8081 W. 21ST LANE
HIALEAH, FL 33016
AREA CODE (305) 822-6028

✓ 176

KEEP IT INSIDE

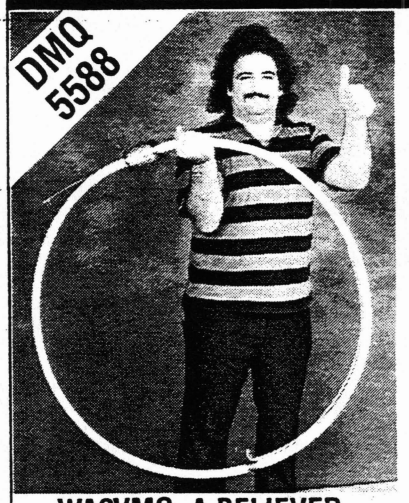

- **Frequency Range** - 13 MHz to 30 MHz
- **Power Limit** - 1500 Watts P.E.P.
- **Diameter** - 39 inches
- **Wind Survival** - 70 + MPH
- **Surface Area** - < .89 Sq. Ft.
- **Antenna Finish** - Heat Shrink Tubing
- **Coax Connector** - PL-259
- **Antenna Weight** - 4 lbs.
- Magnetic Design Maximum Efficiency
- 100% Copper One Piece Construction
- Military Spec Vacuum Variable Capacitor Rated at 35,000 Volts
- HI-Q Harmonic Supression
- All Locations - Indoors or Outdoors
- Bi-Directional at 0-20 Degrees TOA
- Omni-Directional at 25-90 Degrees TOA
- High Signal to Noise Ratio
- Direct Feed 52 OHM Coax SWR <1.5:1
- No Matching Unit, Pretuned Coax, Ground Screen or Radial System

WA2VMO A BELIEVER

WHEN YOU'RE TOLD YOU CAN'T — THE DMQ-5588 SAYS YOU CAN

OPERATION: Apply power to DMQ-5588 and adjust vacuum variable for lowest SWR.

INSTALLATION: DMQ-5588 inside ground floor apartment brick building 100W.

DX CONTACTS MADE BETWEEN 3/88 TO 5/88: 5Z4 P43 PAO TK9 DJ8 GW0 CP5 YS9 ZS6 J37 ZD8 HP9 WP4 IK4 HK6 GM4 I5 EA5 JH1 C6 HK6 IK2 GD4 PJ2 HP4 CE1 5Z4 5T5 KP4 UT4 SP3 CP3 F9 IK3 N91 UA6, UR2 UP1 YT2 UB5 IV3 EA5 TG9 GJ5 ON7 YU1 VO1 DL6 J73 PY8 TI2 LZ1 PY5 OE4 GI0 G4 WP4 KL7

Become a Believer! For more information about this exciting new antenna, call or write DMQ today! Limited time intro offer: $349.50 + Shipping.

221 Slater Boulevard
Staten Island, NY 10305

D3 TECHNOLOGY

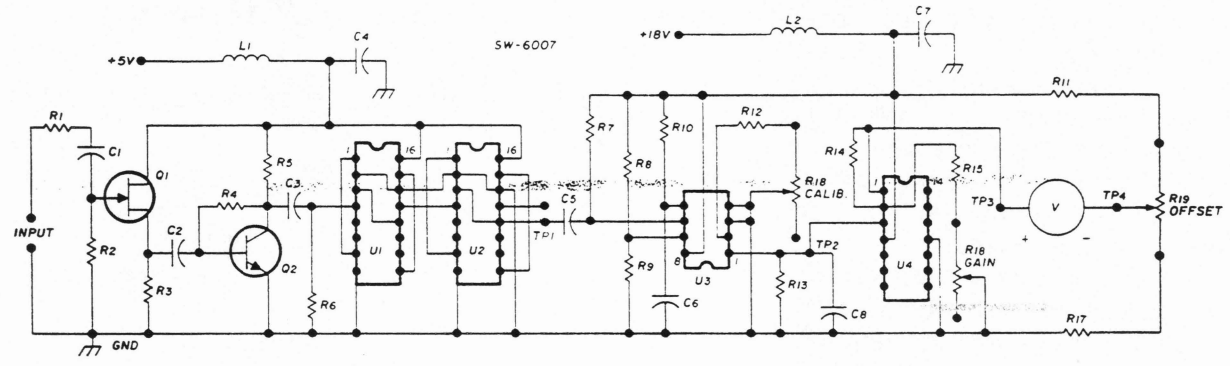

fig. 2. Center frequency digital display.

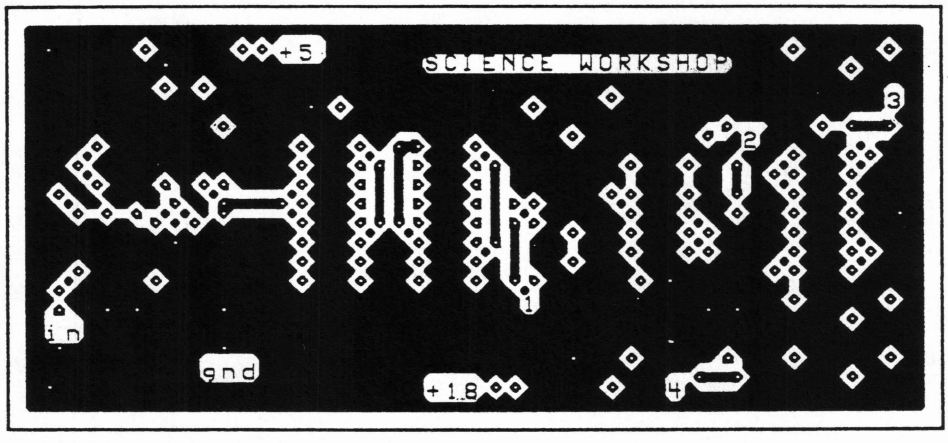

fig. 3. Component side of double-sided pc board.

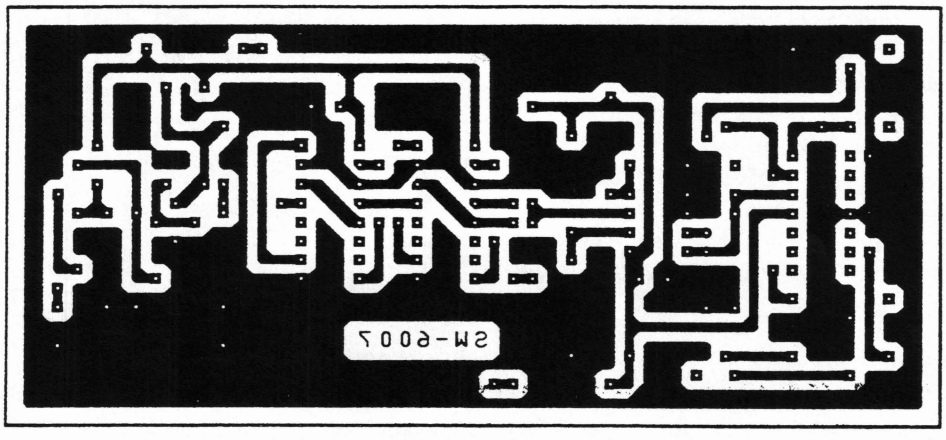

fig. 4. Top side of double-sided pc board.

ing and calibration. The following assembly procedure is recommended:

- Install eight jumpers as indicated in **fig. 5**. The jumpers labeled 1, 2, 3, and 4 will be used as test points for calibration and should be formed as "loops" (see **fig. 5**). Install two inductors, 16 resistors, and three

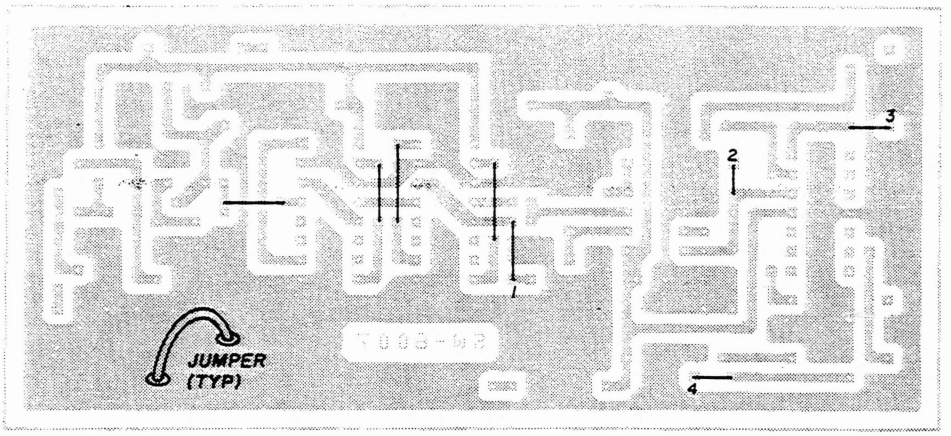

fig. 5. Jumpers numbered 1 through 4 should be formed into "loops" for test points. Numbers 3 and 4 are also used as "output" terminals. See jumper closeup in lower left hand corner.

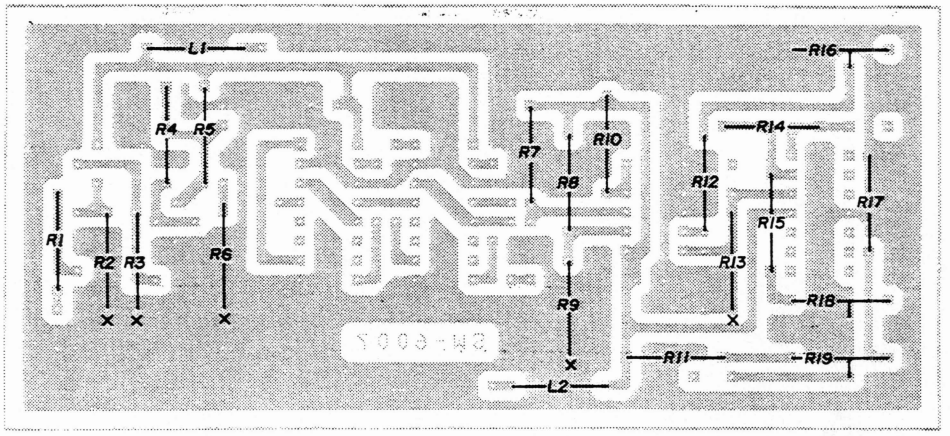

fig. 6. Inductors, resistors and trimpots.

trimpots as indicated in **fig. 6.** Solder the grounded ends of the five resistors marked "x" on both sides of the pc board.

• Install two transistors and eight capacitors as indicated in **fig. 7.** For ease of installation, use sockets for the four chips. Insert them in the locations indicated. (Note the location of the number 1 pin.)

• Check your work carefully for excess solder, splashes, shorts, or "cold" solder joints. This completes the assembly of the frequency readout board.

test and calibration procedure

The accuracy of the display is directly related to the stability of the supply voltage. Final calibration should not be performed until the power supply has warmed up and is stable. Since the circuits work with small dc voltages, paying careful attention to setup measurements will assure accurate results. Proceed as follows:

• Connect a digital voltmeter between test point 3 and ground.

• Connect regulated +18 volts between the +18 volt terminal and ground. Neither the +5 volt supply nor the input signal needs to be connected at this time.

• Apply +2.77 volts between test point 2 and ground.

• Adjust the gain trimpot (R18) for 7.10 volts at test point 3.

• Shift the digital voltmeter negative test lead from ground to test point 4. Leave the positive test lead at test point 3.

• Adjust the offset trimpot (R19) for 1.00 volt on the DVM.

• Now connect the output of the prescaler of the tuner to the input of the digital readout board. Also con-

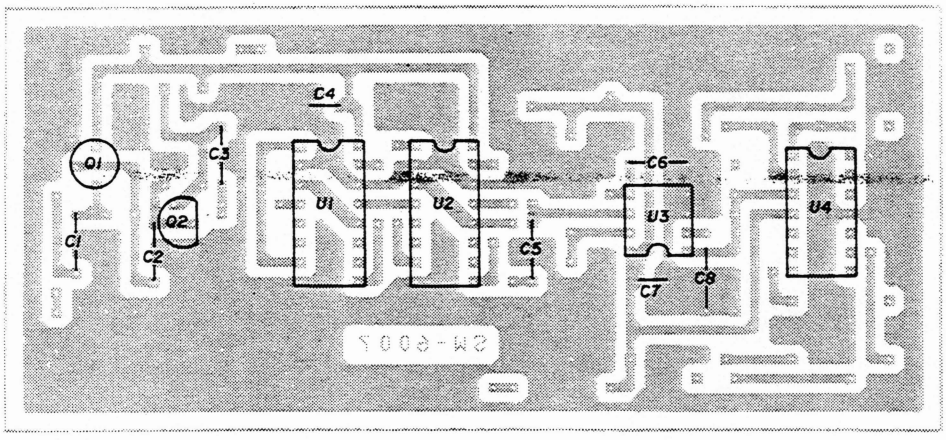

fig. 7. Transistors, capacitors and chips.

Parts list

Capacitors

C1	.02 µF
C2	.02 µF
C3	.02 µF
C4	.1 µF
C5	470 pF
C6	.01 µF
C7	.1 µF
C8	1.0 µF

Inductors

L1	1 mH rf choke
L2	1 mH rf choke

Resistors

R1	2.2k
R2	1 megohm
R3	750 ohm
R4	68k
R5	470 ohm
R6	1k
R7	10k
R8	10k
R9	68k
R10	6.8k
R11	33k
R12	13k
R13	100k
R14	68k
R14	100k
R15	39k
R16	5k*
R17	20k
R18	10k*
R19	5k*

* = trimpots

Transistors

Q1	S31801
Q2	5972

nect the +5 volt regulated supply between the +5 volt terminal and ground.

• If a signal generator is available, set it to 100 MHz and tune the spectrum analyzer so that the 100-MHz signal is centered on the CRT. Use a relatively small scan width setting on the analyzer. (If a signal generator is not available, any known signal can be used.)

• Adjust the calibration trimpot (R16) for 1.00 volt (representing 100 MHz) on the DVM. This completes the calibration process.

troubleshooting

Your scope and DVM are all you need to find a problem if the calibration procedure can't be performed. The first part of the calibration procedure uses the circuits of the op-amp, U4. Any problem here would be limited to this chip and its components.

The second part of the procedure depends upon the correct operation of the remainder of the circuit. It can be broken down into three parts — the preamp, the dividers, and the F/V converter. Use your scope to check the operation of the preamp (Q1 and Q2) and the dividers (U1 and U2). Trace the 2.38 to 4.34-MHz signal from the tuner presecaler output to the board and through the preamp. Remember, +5 volts must be supplied to the prescaler +5 terminal on the tuner. The jumper between the output of the preamp and pin 4 of U1 is a convenient place to check for the preamp output. It should be approximately 3 volts peak to peak. No signal would indicate a problem in the preamp.

Next check test point 1. You should find a square-wave of almost 5 volts peak to peak. No signal would indicate a problem in the divider circuits.

Finally, your DVM connected to test point 2 should show a dc voltage that will vary from 2.38 volts to 4.34 volts, depending on the frequency tuned by the varactor tuner.

The divider circuits on this board may generate spurious signals that can get into the tuner and show up on the CRT display. Check this by disconnecting the input signal to the board. Using a double-sided board with maximum groundplane area, in conjunction with L1 and L2, should prevent this. If it persists, check the grounding between the groundplanes of the pc board and the chassis. It may be necessary to add additional capacitive filtering to the +5 and +18 volt leads at the board terminals. This means both high-frequency (feedthrough) capacitors and electrolytic

capacitors; otherwise, the power supply leads may radiate.

other applications

This direct frequency readout circuit can be used with any i-f. All you need to do is feed the local oscillator signal into the input of the board, making sure that the output frequency of the dividers falls within the range (approximately 0.5-10 kHz) of the F/V converter, and performing the calibration procedure. Adding a divide-by-256 prescaler (as in the cable tuner) ahead of the pre-amp input on the board allows use of local oscillator inputs over 1 GHz.

Changing some of the jumpers (note the extra hole above the jumper at test point 1) provides extra flexibility. You can choose the output of the dividers so that the input is divided by any combination of the four divide-by-2 and divide-by-5 stages. The input and output of the individual divider stages can be brought out to a front panel switch to provide a wide range of frequencies that can be measured by this circuit. I'd be interested in hearing any ideas you might have for using this circuit.

A complete kit of parts is available from the author.

Article M **ham radio**

INTERFACE YOUR COMPUTER TO THE "POOR MAN'S SPECTRUM ANALYZER"

Add features found in expensive commercial units to your "Poor Man's Spectrum Analyzer"

Since the publication of the "Low-Cost Spectrum Analyzer with Kilobuck Features" by Robert Richardson, W4UCH, in the September 1986 issue of *HAM RADIO*,[1] there have been several follow-up articles about modifying and improving this interesting project.[1][2,3,4] I purchased the tuners and receiver board from WA2PZO* and built my own version. I combined the VHF "cable ready" tuner and the VHF/UHF tuner (the VHF section isn't used) in a single enclosure and now have a spectrum analyzer that covers from 1 to 900 MHz in two ranges.

Background

I added a sawtooth generator to produce the frequency sweep described by Joe Carr in the September 1987 issue of *HAM RADIO*.[3] This provided a good oscilloscope display of the frequency spectrum. A turns-counting dial, attached to the multi-turn frequency-control potentiometer, let me set the center frequency accurately after calibrating the dial. The more expensive spectrum analyzers offer additional features like calibrated display (amplitude and frequency), programmable start and stop frequencies, and the capability to plot the spectrum display.

I wanted to add these features to my unit, so I interfaced the "Poor Man's Spectrum Analyzer" to my IBM AT compatible computer and wrote a control program in Microsoft® Quick Basic.* The interface requires a digitizer board that's mounted inside the computer, a frequency control board mounted with the spectrum analyzer, and an interconnecting cable.

The computer controls user-selected start and stop frequencies through the parallel printer port. After the amplitude versus frequency data has been acquired, it's plotted on the screen. The "print screen" command then plots the data on paper via the printer. **Figure 1** shows my spectrum analyzer and the computer interface.

The program lets you select the start frequency in two bands (1 to 500 MHz and 393 to 900 MHz) for use with the two tuners available from WA2PZO. You choose the start frequency, and the program establishes it using a 12-bit D/A converter (DAC). The frequency sweep uses an 8-bit DAC to obtain high resolution over a limited frequency range above the start frequency. The maximum permissible stop frequency is calculated based on the start frequency, and then displayed. After you select the desired stop frequency, the program makes one sweep and displays the plot on the monitor screen.

* WA2PZO, Science Workshop, Box 393, Bethpage, New York 11714.

* IBM AT is a registered trademark of IBM Corporation. Quick BASIC and GW-BASIC are registered trademarks of Microsoft Corporation.

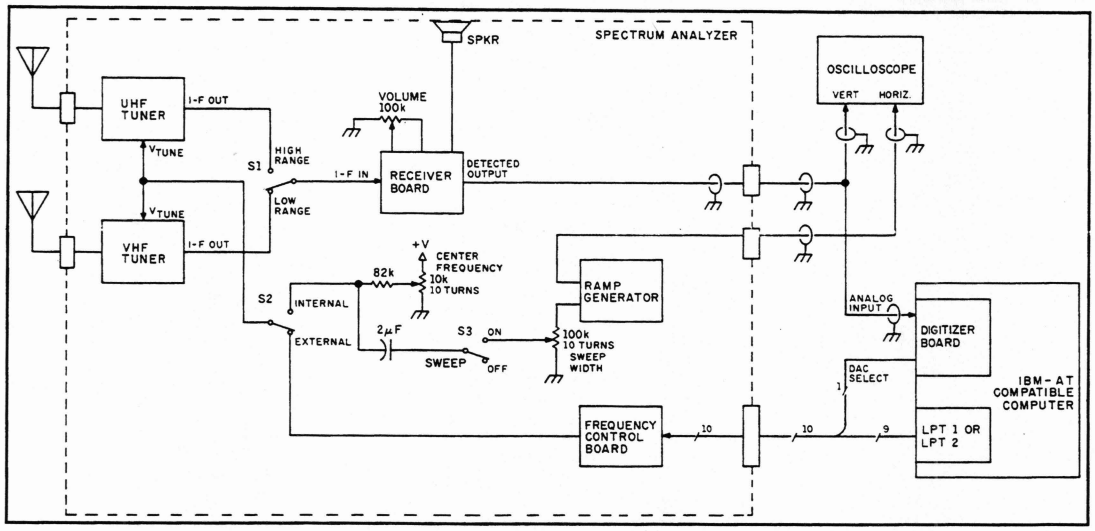

Figure 1. Spectrum analyzer.

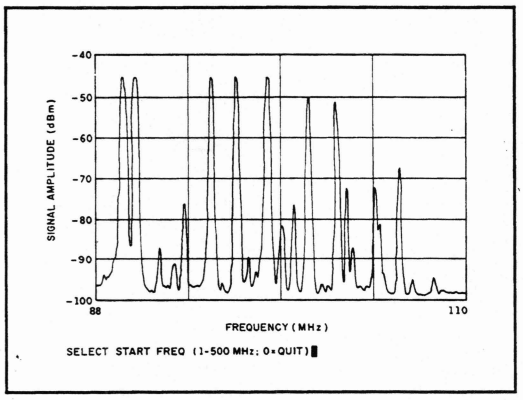

Figure 2. Spectrum plot using the VHF tuner.

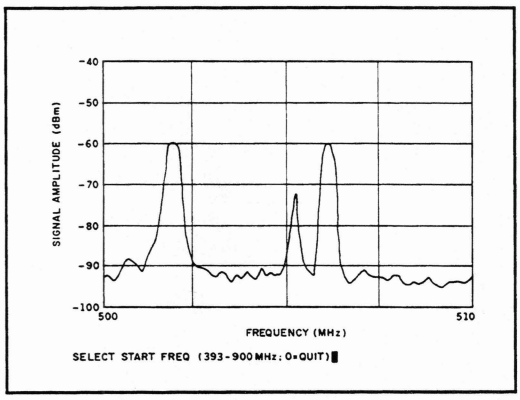

Figure 3. Spectrum plot using the UHF tuner.

Figure 2 shows a typical plot from the spectrum analyzer program using the VHF tuner. This sample shows the FM broadcast band with a part of the aircraft band as received in the Huntsville, Alabama area. **Figure 3** is a typical plot using the UHF tuner. In this plot, you can clearly see the video, color, and audio carriers of television channel 19.

Digitizer board

The schematic for the digitizer board is shown in **Figure 4**. Integrated circuit U3 is an 8-bit A/D converter that requires no special logic for interfacing with the computer data bus. The output latches of the A/D converter have high-impedance outputs that connect directly to the computer's data bus. The A/D converter only outputs data when addressed by the computer. Potentiometer R1 sets the reference voltage for the converter and thus determines the converter's full-scale setting. U1 and U2 are address decoders wired so an address of 22F hexadecimal (559 decimal) will start the conversion.

DAC operation

While in operation, the computer treats the digitizer board as just another memory location. The board only digitizes the analog input when memory location 22F is addressed. U4 is used as a switch to select the appropriate DAC on the frequency control board when the computer sends frequency control data. When the computer addresses memory location 22B hexadecimal (555 decimal), the DAC-select line is a logic high. When the computer addresses memory location 22D hexadecimal (557 decimal), the DAC-select line is a logic low. More about the DAC-select line later.

Digitizer construction

The digitizer board is mounted inside the computer in one of the expansion slots. Each expansion slot has two receptacles for the edge connectors on the expansion boards. The digitizer board requires just one edge connector and uses only the receptacle

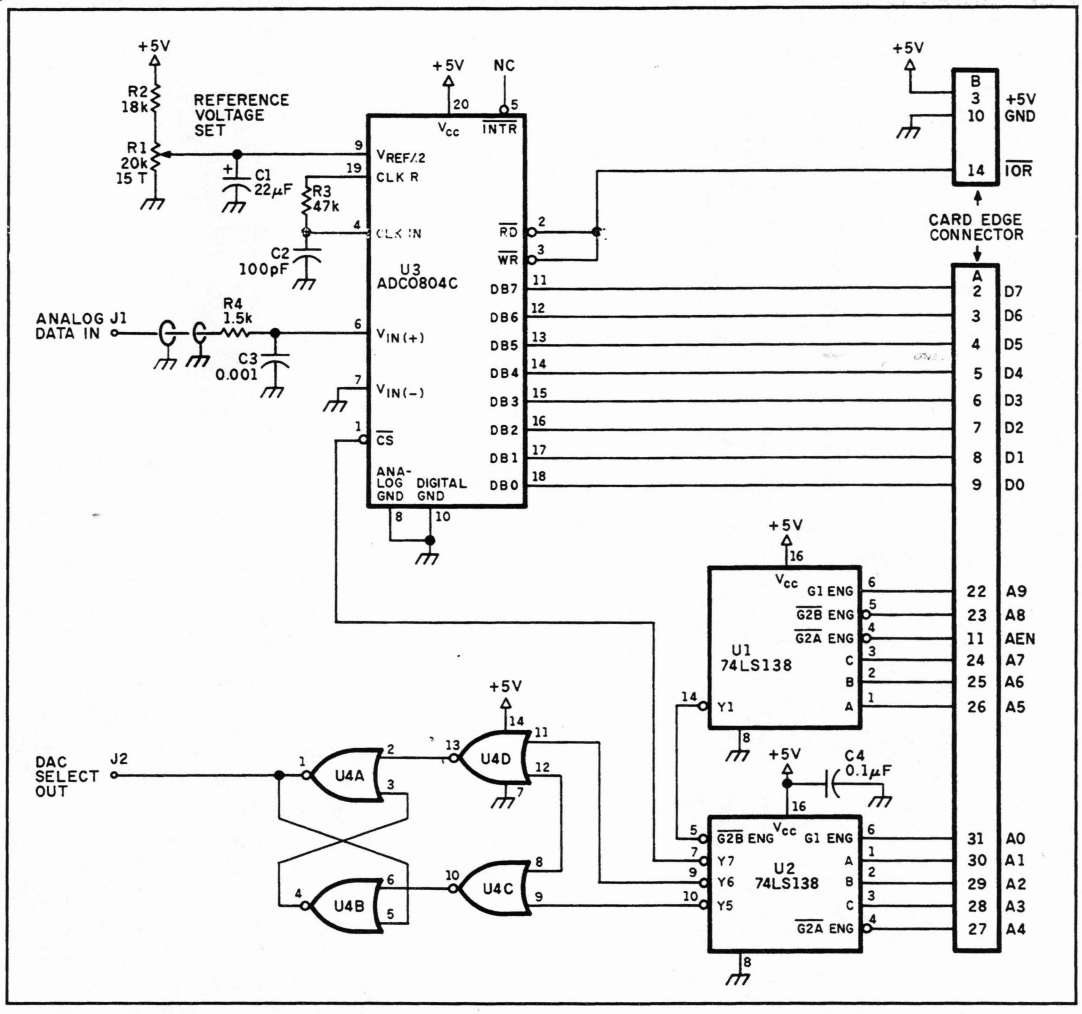

Figure 4. Schematic for the digitizer board.

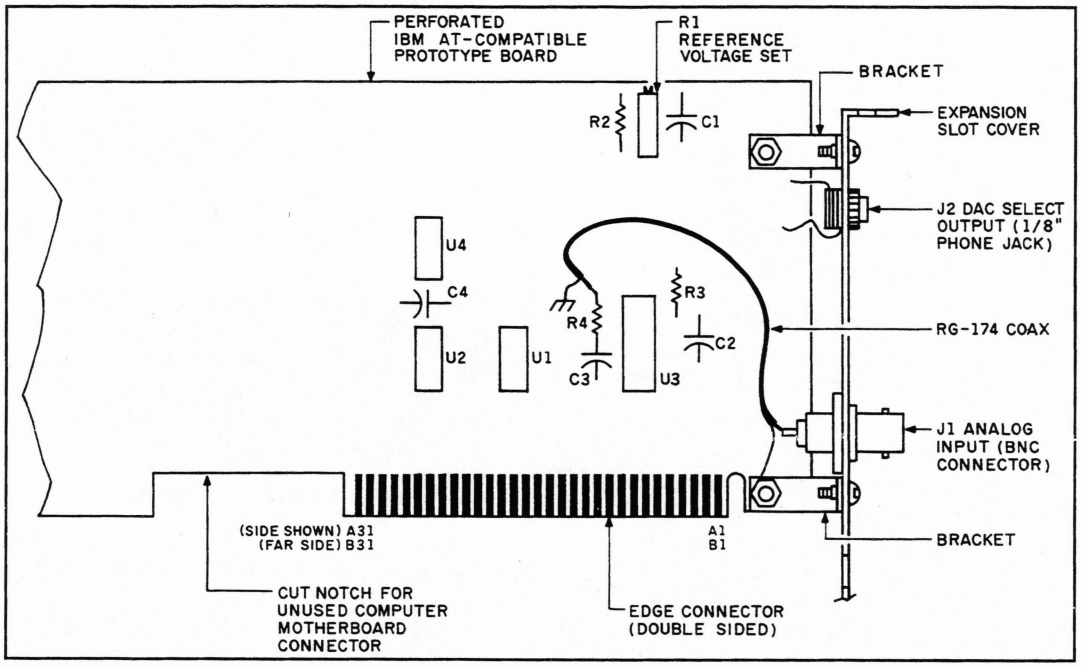

Figure 5. Layout of the digitizer board.

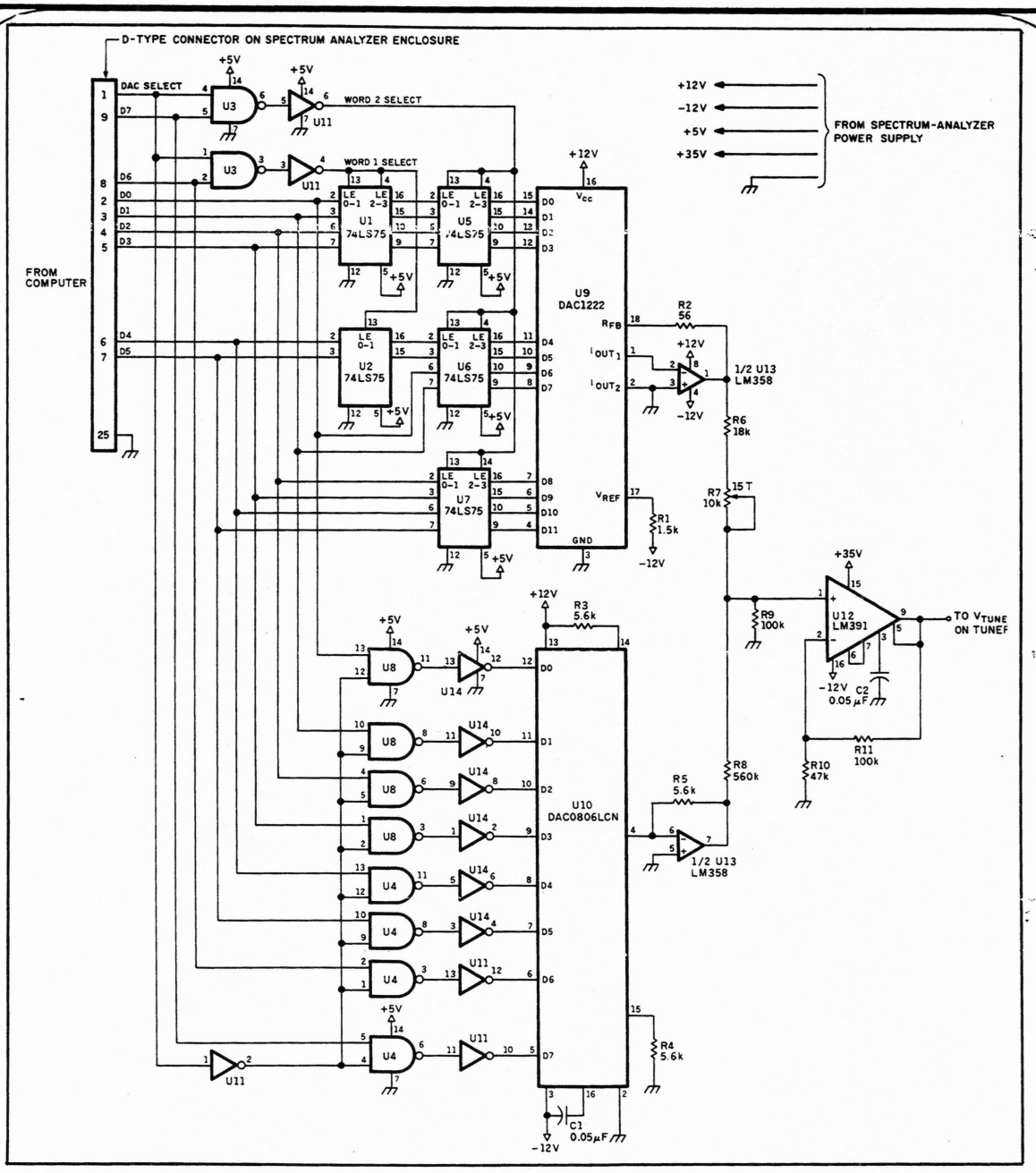

Figure 6. Schematic for the frequency control board.

at the rear of the computer.

I built the board on a perforated prototype board made especially for the computer. These boards are available from most electronics hobby stores and mail-order suppliers for about $25. I used point-to-point wiring. All ICs are mounted in sockets to facilitate repair.

The component layout isn't critical. **Figure 5** shows the layout and edge-connector pinouts of the digitizer board. Note that the edge connector is double sided. In the schematic, pin numbers A1 through A31 refer to edge-connector pins on the component side of the board. Pin numbers B1 through B31 refer to edge-connector pins on the solder side. I made a cutout in the board to clear the unused expansion slot receptacle. R1 is mounted near the top of the board. With the computer cover removed, you can adjust R1 while the board is mounted inside tne case.

Installing the digitizer board

The analog input and DAC-select line are the only connections external to the computer. I attached the slot cover from the slot in which the digitizer board is installed to the rear end of the board (see **Figure 5**).

Two small brackets stand the cover off from the board so the cover fits properly against the computer rear frame when the digitizer board is in the machine. I mounted a BNC connector on the slot cover for the analog input and a 1/8-inch phone jack on the slot cover for the DAC-select signal.

Frequency control board

The schematic for the frequency control board is shown in **Figure 6**. The circuit uses two DACs. A 12-bit DAC decodes the start frequency; an 8-bit DAC sweeps the frequency from the start to the stop frequency.

System logic

Both DACs are controlled through the computer's parallel-printer port. The DAC-select signal generated on the digitizer board chooses the DAC to be addressed by the printer port. When the DAC-select line is a logic high, the 12-bit DAC is selected. Conversely, when the DAC-select line is a logic low, the 8-bit DAC is selected.

The parallel-printer port is an 8-bit port. To control the 12-bit DAC, two 8-bit words — Word 1 and Word 2 — are sent from the computer. Each word contains six bits of data. The remaining two bits identify whether Word 1 or Word 2 is being sent. Bits D0 through D5 from the parallel-printer port contain the data. Bits D6 and D7 are the word identifiers. The identifier for Word 1 is a logic 0,1 for bits D6 and D7, respectively; the identifier for Word 2 is a logic 1,0 for bits D6 and D7, respectively.

The 6-bit data of Word 1 from the parallel printer port are temporarily stored in latches U1 and U2. The data are latched under command of the Word 1 latch signal generated by U3 and U11. The 6-bit data stored in U1 and U2 are then stored in latches U5 and U6. The 6-bit data of Word 2 from the parallel-printer port are stored in latches U6 and U7 under command of the Word 2 latch signal generated by U3 and U11. Thus the 12-bit data required by the 12-bit DAC are stored in latches U5, U6, and U7, following two consecutive outputs from the parallel-printer port. The 12-bit DAC (U9) will then output a current proportional to the 12-bit word present at its inputs. U13 converts U9's output current to an output voltage.

The DAC-select signal is inverted and applied to one input of NAND gates U4 and U8. When the DAC-select signal is low, these gates are activated and the 8-bit data from the parallel-printer port are applied to 8-bit DAC U10's inputs. The computer generates a series of 8-bit words and outputs them to U10 to generate a ramp at U10's output. U13 converts U10's output current to an output voltage.

The voltage-converted outputs of the two DACs are summed by non-inverting amplifier U12. (U12 is an audio power driver intended for use in high-fidelity audio amplifier designs.) Because it can operate with high power supply voltages, I used it in this application as a high-voltage op amp.

The tuners used in the spectrum analyzer require tuning voltages ranging from zero to about 30 volts to cover their wide frequency range. U12's output can produce the required tuning voltages and drive the tuners directly. The op amp doesn't need to deliver a large current because tuning is accomplished inside the tuners with reverse-biased variable-capacitance diodes. Potentiometer R7 is used to calibrate the start frequency.

Control board construction

I built the frequency control board on a perfboard using point-to-point wiring. All integrated circuits are mounted in sockets to facilitate repair. Once again, the board layout isn't critical. The board is mounted inside the spectrum analyzer enclosure. I added switch S2 in series with the tuning inputs of the two tuners so I could select manual (internal) or computer (external) control. See **Figure 1** for details.

Interconnecting cable

The computer and the frequency control board in the spectrum analyzer are connected via a 10-conductor cable. I mounted a 25-pin D-type connector on the spectrum analyzer enclosure for connection to the cable. One end of the cable has a 25-pin D-type connector compatible with the one on the spectrum analyzer. The computer end of the cable has two connectors. One is a 25-pin D-type compatible with the computer's parallel-printer port. The other connector is a 1/8-inch phone plug. This plug carries the DAC-select signal and fits into jack J2 on the computer slot cover mounted on the digitizer board. The pinouts for the D-type connectors on the spectrum analyzer and computer end of the cable are shown in **Figure 7**.

Computer program

I originally wrote the computer program in Microsoft Quick BASIC for use with an EGA monitor so I could tap into the high-resolution graphics capability. I've included line numbers on all lines of the code (Quick BASIC doesn't require line numbers for all lines) so the program can run with the more

common BASIC versions like Microsoft GW-BASIC.

The program runs much slower in GW-BASIC. This means the frequency sweep generated by the computer will be slower, and you may miss some of the intermittent signals you want to "catch" in the frequency spectrum. For the most part, the speed of the BASIC program or the computer isn't a critical parameter.

I first wrote the program for use with parallel-printer port 2 (LPT2), with the spectrum analyzer connected to LPT2 and the printer connected to parallel-printer port 1 (LPT1). Using this arrangement eliminates the need to switch connections between the printer and spectrum analyzer at the parallel-printer port when I want a hard copy of the spectrum plot. I also have a version for use with LPT1 if you have only one parallel printer port.

The computer program contains about 300 lines of code and is too long to be included with this article, but I'll send you a copy of the program. My address appears at the beginning of the article. A self-addressed stamped envelope would be appreciated. I can also supply the program on a diskette for $5. Please state whether you want the LPT1 or LPT2 version.

A flowchart for the computer program is shown in **Figure 8**. The program begins with the establishment of four arrays. Arrays A and B contain the digitized data. The digitized spectrum analyzer data are stored immediately upon acquisition in Array A. Array B stores the digitized data after it's scaled to an equivalent dBm input to the spectrum analyzer. Arrays A and B both contain a maximum of 256 elements, with each element corresponding to a sample of spectrum analyzer's detected output. Because an 8-bit DAC is used for the fre-

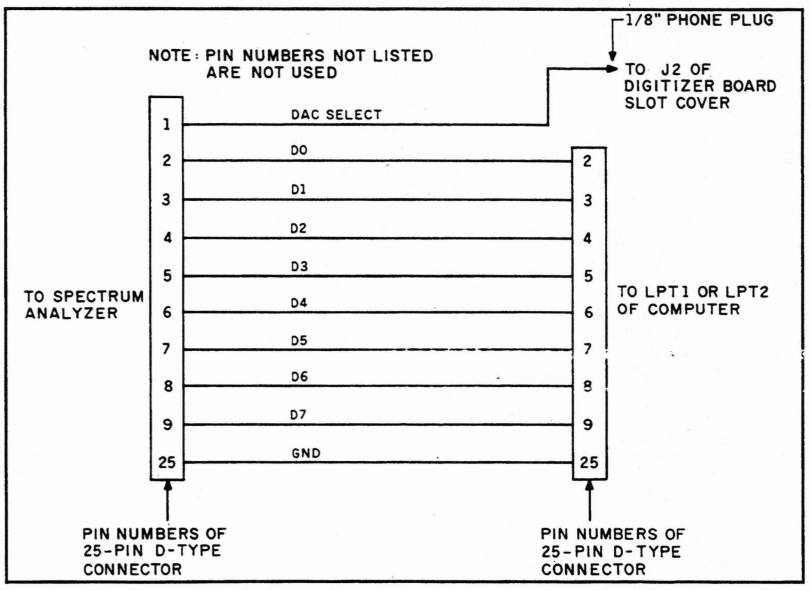

Figure 7. Interconnecting cable.

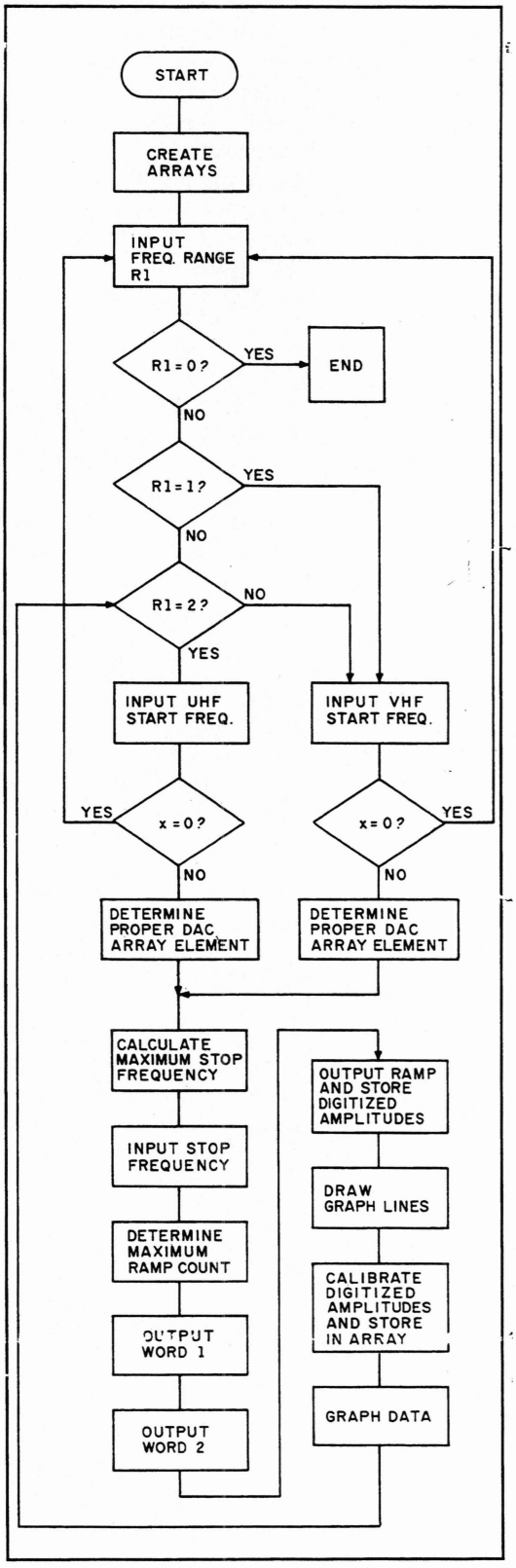

Figure 8. Flowchart for the computer program.

quency sweep, a maximum of 256 samples is possible (that is, 2 to the 8th power). Therefore, 256 array elements are required. Arrays C and D have 4098 elements each. These arrays contain the data for the two words that are sent to the 12-bit DAC for establishing the start frequency. The data for Word 1 are stored in Array C and the data for Word 2 in Array D. The program automatically creates the data for arrays C and D and stores them in the proper locations within these arrays before the program continues. The program then prompts you for the desired frequency range. There are three possibilities: 0 to quit, 1 for the VHF tuner (1 to 500 MHz), and 2 for the UHF range (393 to 900 MHz). You'll then be prompted for the desired start frequency.

After you've input the start frequency, the look-up tables in the program are used to determine the elements of Array C and Array D corresponding to the desired start frequency. The program includes two look-up tables — one for the VHF tuner and the other for the UHF tuner. The tuning curves for the two tuners aren't linear across the wide tuning ranges. **Figure 9** shows a plot of the tuning voltage versus input frequency for the VHF tuner. As you can see, the curve is very nonlinear. The UHF tuner has a similar tuning voltage versus input frequency characteristic. I've divided the tuning curve of each tuner into several small linear segments and stored equations for these segments in the look-up tables. The program selects the proper segment based on the selected start frequency, and determines the one element out of 4098 that corresponds to the frequency nearest the one selected. The element number (1 to 4098) is stored in variable f1.

Next, the maximum allowable stop frequency, based on the selected start frequency, is calculated and displayed. This frequency is the upper limit of the permissible frequency sweep, based on the start frequency selected. (Remember that the frequency sweep is generated by an 8-bit DAC.) The computer outputs a series of 8-bit words ranging from 000 to a maximum of 256 to generate a ramp which is applied to the tuners' input. A count of 256 is the maximum value available with 8 bits and thus represents the largest ramp that can be produced. This means a count of 256 will represent the maximum available frequency span.

Because the tuning curves of the tuners are nonlinear, a maximum frequency span corresponding to a count of 256 isn't constant across the tuners' frequency range. Therefore, the maximum allowable stop frequency must be calculated for each start frequency selected.

The program prompts you for the desired stop frequency. After this frequency is input, the program converts it to the nearest number from 000 to 256 corresponding to that frequency. That number is stored in variable f2. The program then outputs data to the frequency control board telling it to set up the start frequency using the 12-bit DAC. The appropriate element of Array C, corresponding to Word 1, is sent first. This is followed by the appropriate element of Array D, corresponding to Word 2.

After a brief delay routine is completed, the frequency ramp output is generated, and the detected output amplitude of the spectrum analyzer is sampled by the digitizer board and stored in Array A. The detected output is sampled and the data stored for each element of the ramp. The ramp can contain a maximum of 256 elements (that is, the computer counts up to a maximum of 256), so the maximum number of digitized samples equals 256.

Next, the program creates the display screen by drawing the border and amplitude lines and labeling the axes. The digitized samples stored in Array A are then "calibrated" and converted to dBm (decibel referenced to 1 mW) using another set of look-up tables. I created the look-up tables for the VHF and UHF tuners from measurements I made of the tuners using a laboratory-grade signal generator and oscilloscope. The calibrated amplitudes are stored in Array B.

Finally, the data stored in Array B are graphed on the screen, and the program returns to the first prompt for a start frequency. At this point, you can output the graph to the printer using the "print screen" command if you wish.

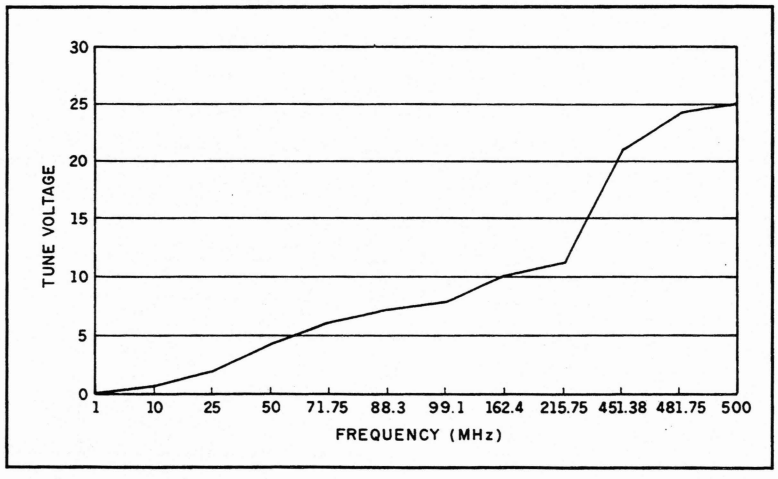

Figure 9. VHF-tuner curve.

Installation and alignment

Once you've assembled the digitizer board, carefully inspect it for any wiring errors, shorts, or bad solder joints. Install the digitizer board in the expansion slot desired. Adjust potentiometer R1 on the digitizer board to a point approximately midway between the extremes of its range.

Digitizer alignment

To align the digitizer board, you must apply +2.5 volts DC to its analog input. I used a 12-volt DC power supply and a potentiometer connected as a voltage divider between the power supply output and ground. The potentiometer's wiper was connected to the BNC connector on the digitizer board through a coaxial cable. An oscilloscope was used to measure the voltage at the wiper precisely. To avoid loading down the circuit, use a high-impedance device like an oscilloscope or digital voltmeter (DVM) to make this measurement. Verify that the voltage is about +2.5 volts before connecting this voltage to the computer.

Computer interface

Turn on the computer and load the spectrum analyzer program into BASIC. Connect the test voltage to the BNC-input connector on the digitizer board and readjust the voltage for precisely +2.5 volts DC.

Run the spectrum analyzer program. The words "PLEASE WAIT" should appear on the screen. The computer is now filling Arrays C and D with the proper data for the 12-bit DAC. This takes a little time, especially if you're using GW-BASIC. The wait message appears to let you know that the computer is working.

In a few moments, the screen prompts you to select the desired frequency range. Type a 1 to choose the VHF range. The computer now prompts you for the desired start frequency. Type 100. The computer asks you for the desired stop frequency. Type 132, and a graph will appear on the screen. After a pause, a horizontal line corresponding to the input voltage level will be plotted on the graph. Below the graph, you'll again see a computer prompt for the desired start frequency.

The test voltage of +2.5 volts DC corresponds to a −60 dBm input to the VHF tuner. If the line that was plotted on the graph isn't drawn at the −60 dBm mark, readjust R1 on the digitizer board and again select 100 as the start frequency and 132 as the stop frequency. Observe the new plot. Repeat this operation until the line is plotted at the −60 dBm mark.

Frequency-control board alignment

Remove the test voltage from the input to the digitizer board and connect the spectrum analyzer detected output to the digitizer input board. Connect the 10-conductor cable from the spectrum analyzer to the computer parallel-printer port. Next, connect the DAC-select line to the digitizer board's 1/8-inch phone jack. Configure the spectrum analyzer so the frequency control board controls the VHF tuner's frequency, and the output of the VHF tuner is connected to the receiver board. With my spectrum analyzer, all I have to do is select low range (VHF) and external control with the two toggle switches, S1 and S2, and reconnect the antenna to the VHF tuner (see **Figure 1**). Adjust R7 on the frequency-control board to the center of its range.

Perform the frequency-control board alignment using a known frequency as an input to the spectrum analyzer. Try the frequency of an FM commercial radio station. At the prompt for select start frequency, type in the frequency of a local FM station. (I used 89.3 MHz.)

At the select stop frequency prompt, type in the maximum stop frequency that the computer calculated and displayed. After a pause, you should see a spectrum plot displayed on the screen. When the plot is complete, listen to the audio output from the spectrum analyzer. The spectrum analyzer will be "resting" on the start frequency that you selected.

If your R7 setting is correct, you should hear the radio station in the speaker. If you don't hear the proper station, readjust R7 on the frequency-control board. Align the frequency-control board using several different stations as your start frequency. Adjust R7 so you can hear the majority of them to some extent.

The 12-bit DAC used for the start frequency control generates only discrete voltages. It won't be able to position the start frequency precisely on all selected start frequencies. Consequently, you won't hear all the FM stations that you use for calibration clearly. If R7 is properly adjusted, the frequencies 89.3 MHz and 96.1 MHz are easy to hear when used as start frequencies. Use these frequencies for calibration, if they are available in your area.

As an alternative, you can use a signal generator as the signal source, adjusting R7 so the spike for the generator frequency is plotted at the left of the graph. If you choose this approach, you should also try several different frequencies. Adjust R7 for

the best compromise.

That's all you have to do to align the digitizer and frequency-control boards. Now, at the start frequency prompt, type 0. The computer asks you to select the desired frequency range. Type 0 to end the program.

Conclusions

I've found that these modifications provide an interesting versatility to WA2PZO's spectrum analyzer.[4] While the computer interface doesn't make the "Poor Man's Spectrum Analyzer" equal in performance to more expensive laboratory grade equipment, it does allow some reasonably accurate measurements. ■

Parts List: Digitizer Board

C1	*22-μF tantalum*
C2	*100-pF disc ceramic*
C3	*0.001-μF disc ceramic*
C4	*0.01-μF disc ceramic*
(All capacitors 12 volts DC or higher)	
J1	*BNC-type connector (chassis mount)*
J2	*1/8-inch phone jack (chassis mount)*
R1	*20-k, 15-turn potentiometer*
R2	*18 k*
R3	*47 k*
R4	*1.5 k*
(All fixed resistors 1/4-watt, 10 percent)	
U1	*ADC0804C (8-bit analog-to-digital converter)*
U2	*74LS02 (quad 2-input NOR gate)*
U3,U4	*74LS138 (1-of-8 decoder/demultiplexer)*

Parts List: Frequency Control Board

C1,C2	*0.05 μF disc ceramic (All capacitors 35 volts DC or higher)*
R1	*1.5 k*
R2	*56*
R3,R4,R5	*5.6 k*
R6	*18 k*
R7	*10-k, 15-turn potentiometer*
R8	*560 k*
R9	*100 k*
R10	*47 k*
R11	*100 k*
(All fixed resistors 1/4-watt, 10 percent)	
U1,U2,U5,U6,U7	*74LS75 (4-bit bi-stable latch)*
U3,U4,U8	*74LS00 (quad 2-input NAND gate)*
U9	*DAC1222 (12-bit binary multiplying D/A converter)*
U10	*DAC0806LCN (8-bit D/A converter)*
U11,U14	*74LS04 (hex inverter)*
U12	*LM391 (audio power driver)*
U13	*LM358 (low power dual op amp)*

References

1. Robert M. Richardson, W4UCH, "Low Cost Spectrum Analyzer with Kilobuck Features," *HAM RADIO*, September, 1986, pages 82-90.
2. Joe Carr, K4IPV, "Building the 'Poor Man's Spectrum Analyzer,' " *HAM RADIO*, March 1987, pages 99-104.
3. Joe Carr, K4IPV, "Revisiting the 'Poor Man's Spectrum Analyzer,' " *HAM RADIO*, September 1987, pages 49-52.
4. Murray Barlowe, WA2PZO, "Add a Digital Readout to the 'Poor Man's Spectrum Analyzer,' " *HAM RADIO*, September 1988, pages 84-93.

These photos did not appear in the magazine. Allen sent them to us when he heard that we were putting the book together.

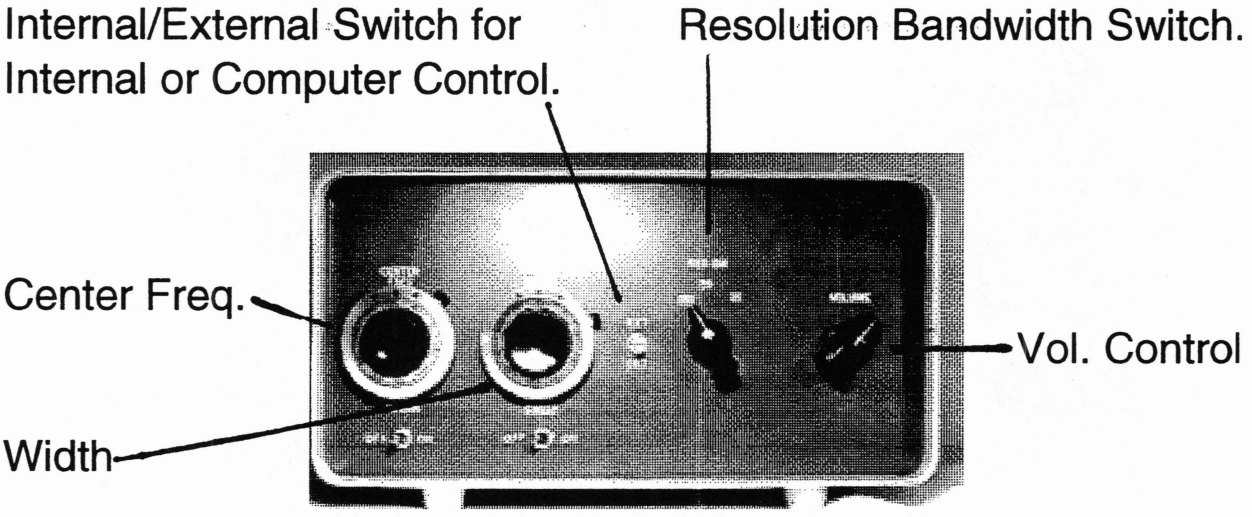

FRONT VIEW OF COMPUTER CONTROLLED ANALYZER

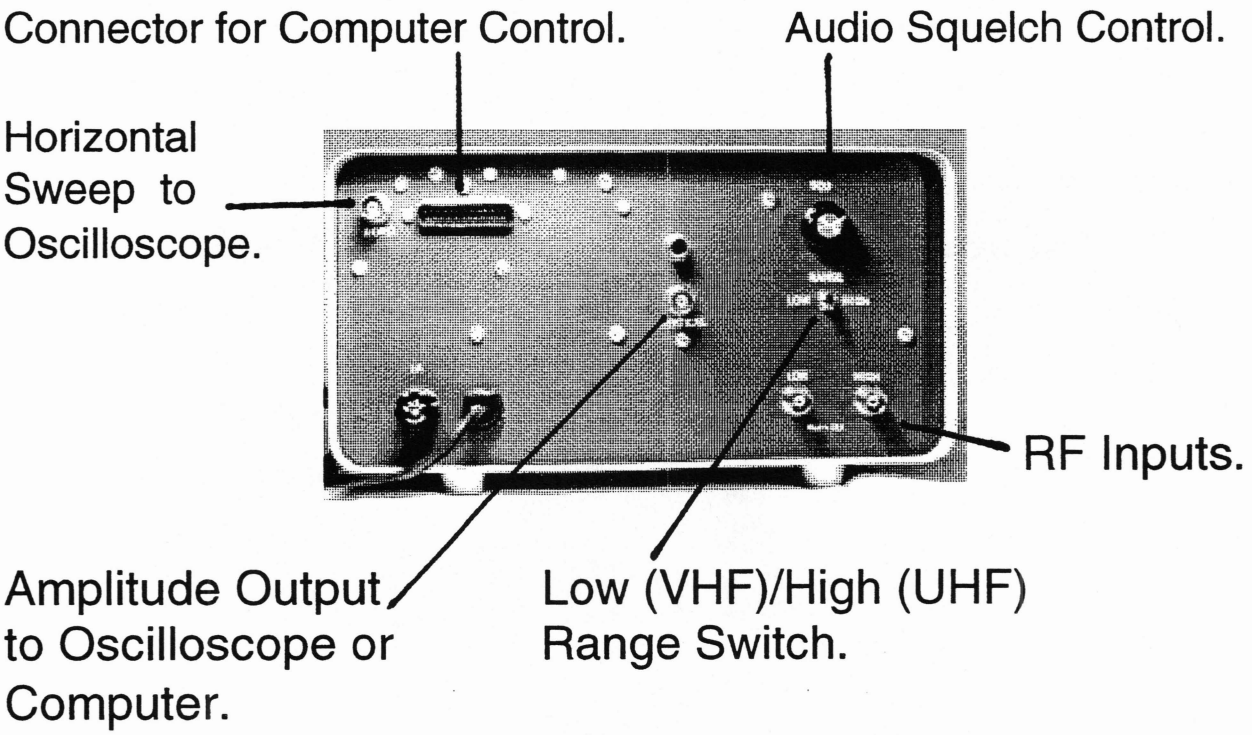

REAR VIEW

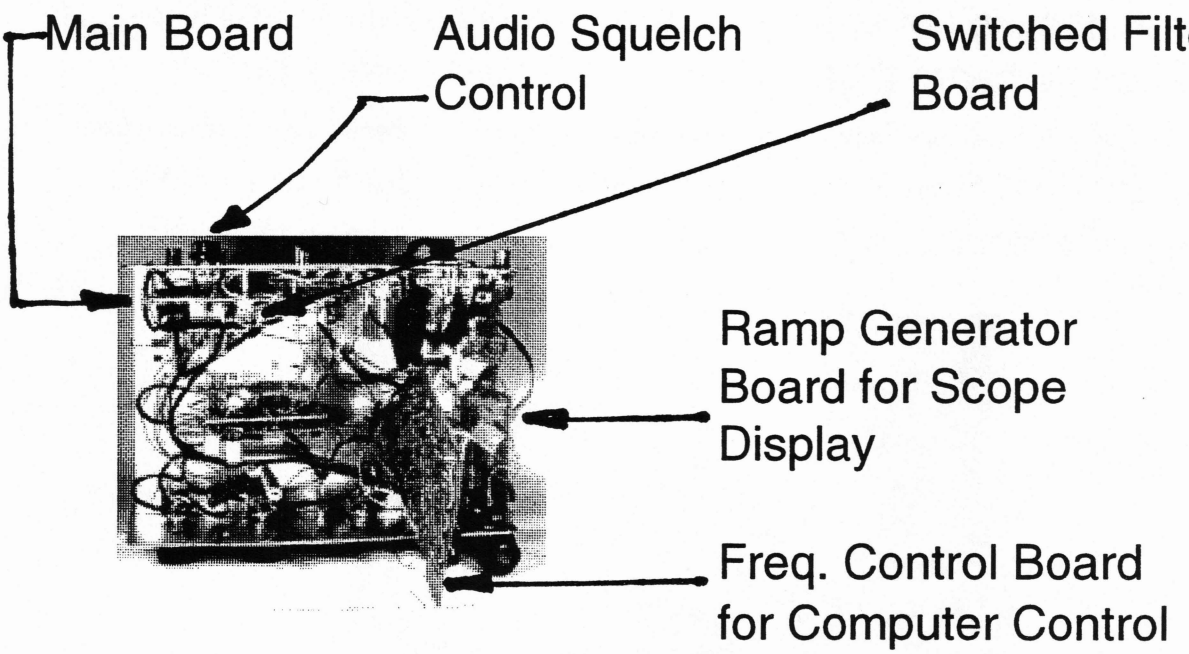

INTERNAL VIEW (TOP SIDE) WITH FREQUENCY CONTROL BOARD FOLDED OUT

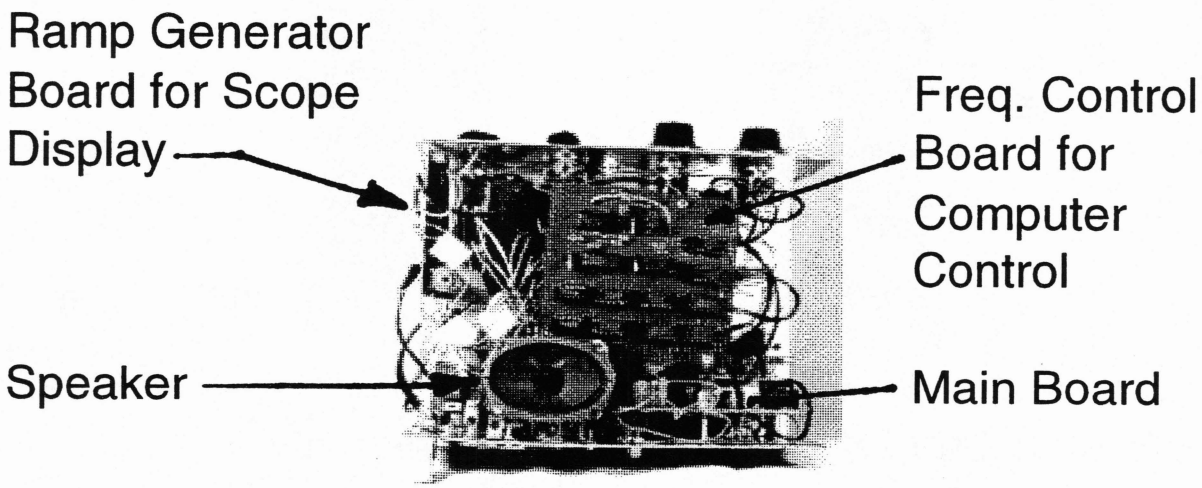

INTERNAL VIEW (TOP SIDE)

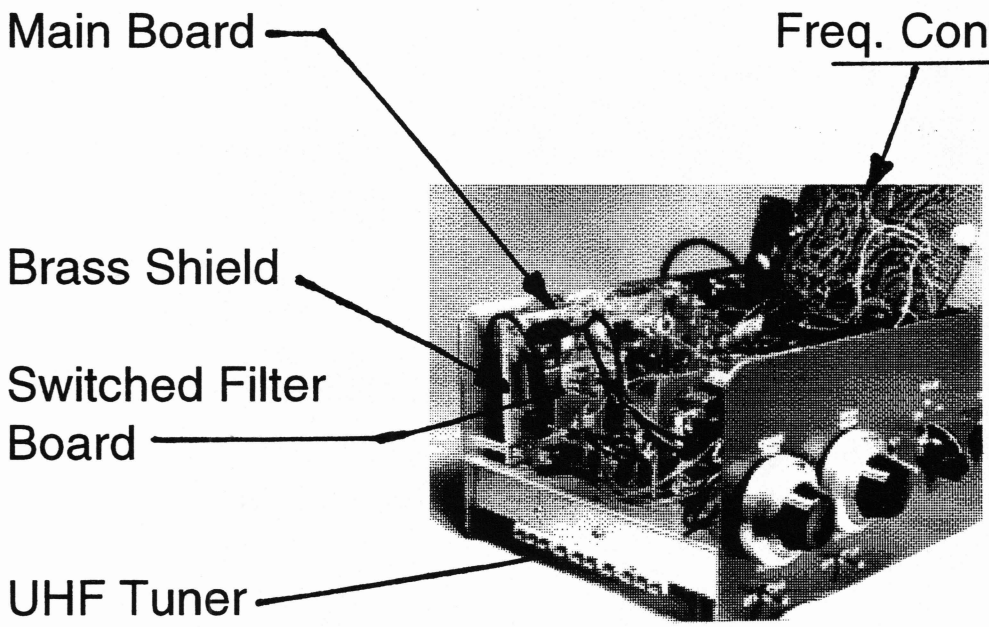

INTERNAL SIDE VIEW OF SPECTRUM ANALYZER

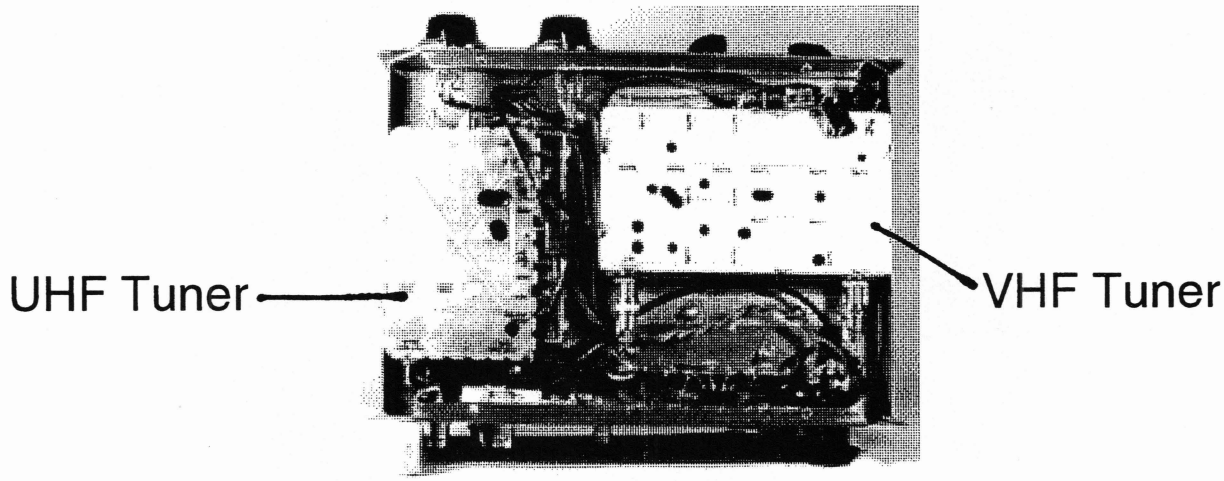

INTERNAL VIEW (BOTTOM SIDE)

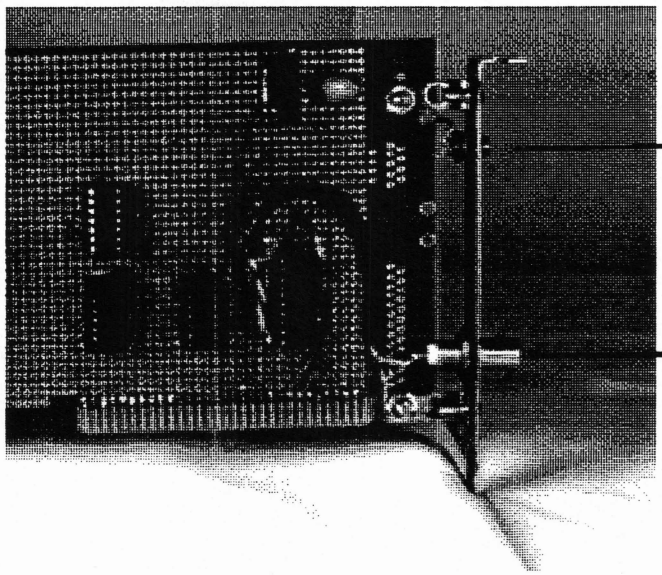

COMPUTER DIGITIZER BOARD

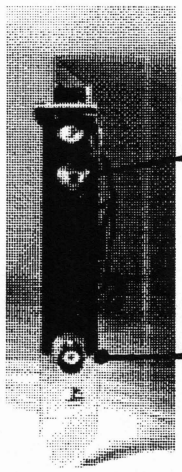

COMPUTER DIGITIZER BOARD (END VIEW)

"POOR MAN'S SPECTRUM ANALYZER"

For several years now, I have been searching for a spectrum analyzer that I could afford. The brand new ones, whether from Tectronix or Hewlett-Packard, cost from $10,000 to $50,000, a bit much for an Amateur Radio Operator to work into the family budget!! For at least 5 years, I have been bidding on government surplus test equipment and have never succeeded in getting a bid on a spectrum analyzer. You can find them at hamfests and sidewalk sales every once in a while, but they are never cheap. About a year ago, there was an article in **QST** on building your own spectrum analyzer, authored by Al Helfrick, K2BLA. That article was very interesting, and I immediately sent him a letter for more information, as well as contacting **A&A Engineering** (See ad in June 88 QST, p. 122). There were design problems and **A&A** informed me that at that time, they could not deliver printed circuit boards, but would contact me when they were available. They never contacted me, and I never heard anything from them until I opened up **QST** and noticed that they had finally, a year or two later, perfected the product enough to offer it for sale. **A&A** seems to be a quality company, so you might want to consider purchasing their product as referenced above, now that it is ready. However, I chose to go a different way and am very pleased with the results. For reference, please see **HAM RADIO** magazine, September 1986, March 1987, and September 1987. This design is the invention of **Murray Barlowe, WA2PZO**, who does business as Science Workshop, Box 310, Bethpage, N.Y. 11714, phone (516) 731-7628. The inital design was very bare-bones, but he has refined it and improved it over the last couple of years. The basic approach is this:

The "front end" of the analyzer is a simple **varactor-tuned television tuner** which you can purchase for $15 to $20, either from Murray or on the fleamarket/hamfest circuit. Another major block is a "main board" which includes a **mixer** to convert the tuner output (45Mhz) down to a **second I.F. of 10.7MHz** which is then fed to a **standard fm detector I.C.** which provides audio output, signal meter output, and vertical drive to an external oscilloscope (any cheap one will do, so long as it has X/Y capacity). The last major block is a **ramp board** which **sweeps** the varactor tuner in the TV tuner, and simultaneously provides a **ramp waveform to the oscilloscope horizontal or "X" axis**. There are two other "deluxe" options you can add, and those are **digital readout of center frequency** and a **tracking signal generator**. I have purchased all options and have now completed the project, and can highly recommend it. It is a project for the experienced builder, but even if you don't have much

experience, I feel that you could build it with a little help from me or others. The **technical specs** are as follows:

Width control = from full range of tuner down to a few kHz

Digital readout = 3 digits (0-500) with about 1% accuracy

Front panel controls: volume, squelch, gain, rx/analyze, rate, width, FM/AM, Meter on/off, coarse range switch,center frequency, tracking generator on, tracking adjust, and rotary attenuator (future addition).

Well, if anyone is interested in trying this project, please contact me and I will do my best to advise you (but not build it for you). It is probably one of the more interesting homebrew projects I have tried, and I think you would be impressed. What's it good for? **Tuning amplifiers, transmitters, cavities, tuned circuits, receivers, filters, duplexers, resonant lengths of coax, antennas, and many more.** You can even spy on the spectrum, find a signal, identify what type of signal, and then listen to it!! No longer can anybody get by with a "secret frequency"! *Sammy beware!*

I'LL TALK TO YOU SOON ON 444.3 !
WB5LCN

This is a reprint of an article Steven wrote for his club newsletter, the SKYWAVE.

He can be reached at:

5100 Edgecliff Drive
Wichata Falls, TX 76302

CHAPTER FOUR

User Feedback

Modifications, enhancements, applications, overall schematics, new ideas, assembly drawings & photos, etc.

TERRY PORTER USER FEEDBACK

Terry suggests a way to build a LED DVM for the Center Frequency Display.

Mr. Terry Porter
25 Lincolnshire Blvd.
Owego, N.Y. l3827
Nov. 18 1988

Dear Murray:

Our letters did cross in the mail, but you did supply me with enough information. My main concern was how the parts were installed for the tracking generator. The only other question was about L2, How it was installed in the circuit. But I think it is used as a step up transformer, which would put the side of it with the center tapped pair toward the I.C. If it doesn't work well this way, I'll just turn it around.

Enclosed is a copy of how I plan to build the display. It has <u>not</u> been tested yet, but I think the design is good, even is some values may need to be changed.

As far as the display reading 0-500 if a mixer is used ahead of the cable converter, this could be easily changed by supplying an offset voltage to the display, most likely from the same switch that would be used to turn the mixer on, to raise the display reading by the correct amount.

73
Terry Porter

P.S. When I ordered the CA3l62 Chip I was told that pin l0 could be used for offset, by a friend. The chip I ordered came, but they sent the wrong data sheets. If pin l0 cannot be used in this manner, the 74l op-amp may have to be used. I'm still waiting for the data sheets.

MR. TERRY PORTER
25 LINCOLNSHIRE BLVD.
OWEGO, NY 13827

11/22/88
Gen.

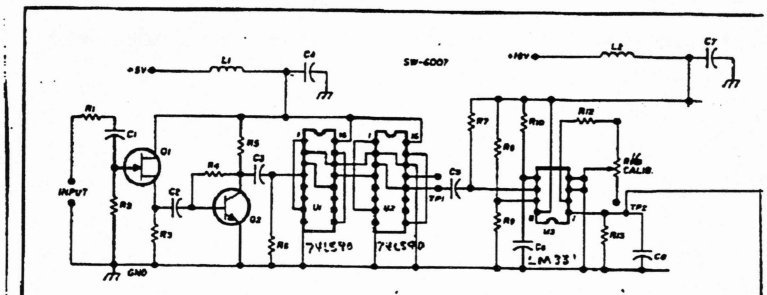

fig. 2. Center frequency digital display.

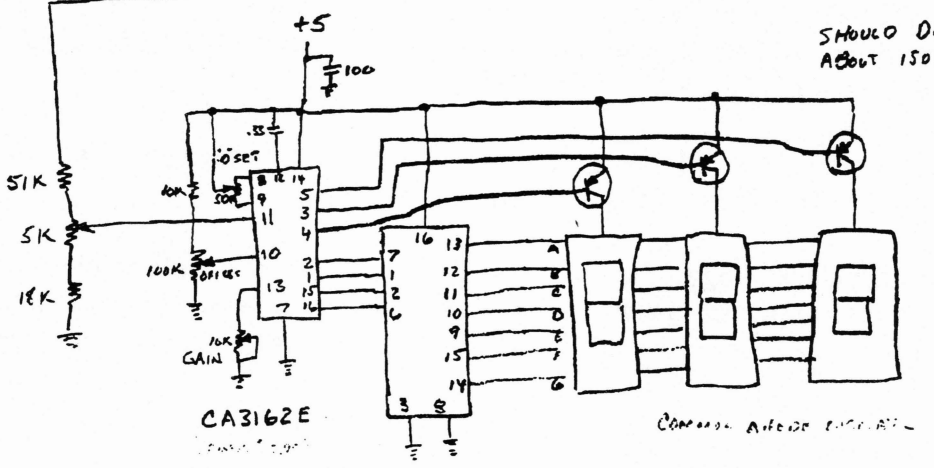

SHOULD DRAW ABOUT 150 MA.

.710 V X 5 = 3.55 V

(1) GROUND PINS 10 & 11 OF CA3162
(2) ADJUST "0" SET SO DISPLAY READS "000"
(3) REMOVE GROUND FROM PIN 11 AND APPLY .900 V TO PIN 11
(4) ADJUST GAIN SO DISPLAY READS 900
(5) APPLY 2.77 V TO TP2
(6) ADJUST 5K POT FOR READING OF .710 V AT PIN 11 OF CA3162
(7) REMOVE GROUND FROM PIN 10 AND ADJUST OFFSET FOR DISPLAY OF 100
(8) APPLY 100 MHZ SIGNAL TO INPUT OF ANALYZER
(9) ADJUST R16 SO DISPLAY READS 100

TERRY PORTER USER FEEDBACK 3

MR. TERRY PORTER
25 LINCOLNSHIRE BLVD.
OWEGO, NY 13827
JAN. 12 1989

DEAR MURRAY:

THIS IS HOW I'M SWITCHING FILTERS. A MINATURE (CRYSTAL CAN) RELAY WAS USED. I HAVEN'T FOUND A 13 KHZ, 10.7 MHZ FILTER YET BUT I AM USING A 24 KHZ AND THE 200 KHZ, AND THE RELAY SETUP SEEMS TO WORK FINE. THE 2N2222 GIVES A LITTLE GAIN TO MAKE UP FOR THE LOSS IN THE NARROW FILTER.

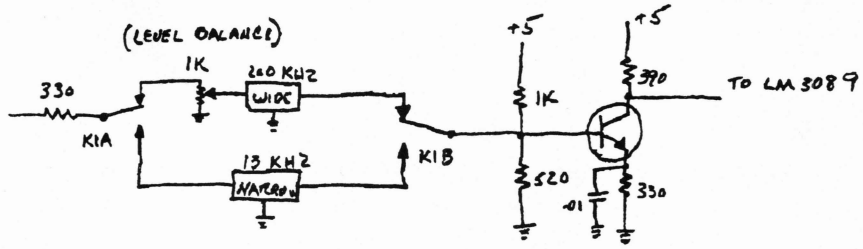

WOULD YOU HAVE SCHEMATICS FOR BOTH THE CABLE TUNER AND THE UHF TUNER? I LIKE TO KEEP RECORDS OF EVERYTHING I BUILD, PLUS I WANTED TO SEE IF THAT UHF TUNER HAS A LOW PASS FILTER THAT COULD BE DISABLED. I TRIED ANOTHER UHF TUNER I HAD AND THE ONE I PURCHASED FROM YOU SEEMS TO WORK BETTER. IT MUST BE A GOOD TUNER.

73
Terry Porter

UNDER CONSTRUCTION, NO DISPLAY.

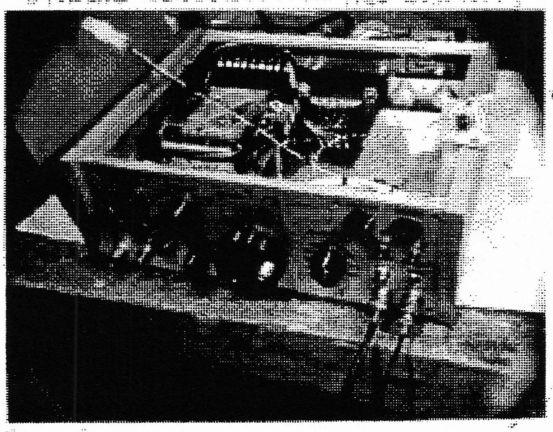

FRONT PANEL FOLLOWS

TERRY PORTER USER FEEDBACK 4

I couldn't tell from the little photo Terry sent along with his letter on the previous page, the extent to which he had gone to build his version of the Spectrum Analyzer! I was amazed when I received these new photos, along with his description.

WA2AVC SPECTRUM ANALYZER

These are photos of my WA2AVC spectrum analyzer under construction. It is operating, but some of the features are not complete. For now, the front panel is a piece of .090 T6 aluminum with the control assignments marked with an indelible fine point marker. It will be covered on the finished product by a thinner piece (.040 T6) of aluminum that will be painted, and have proper lettering applied. I do it this way to experiment with different designs for the markings, and if necessary to cover holes if I elect to make some real changes. It also permits the cover panel to be secured using some of the control nuts, concealed under the knobs. This makes

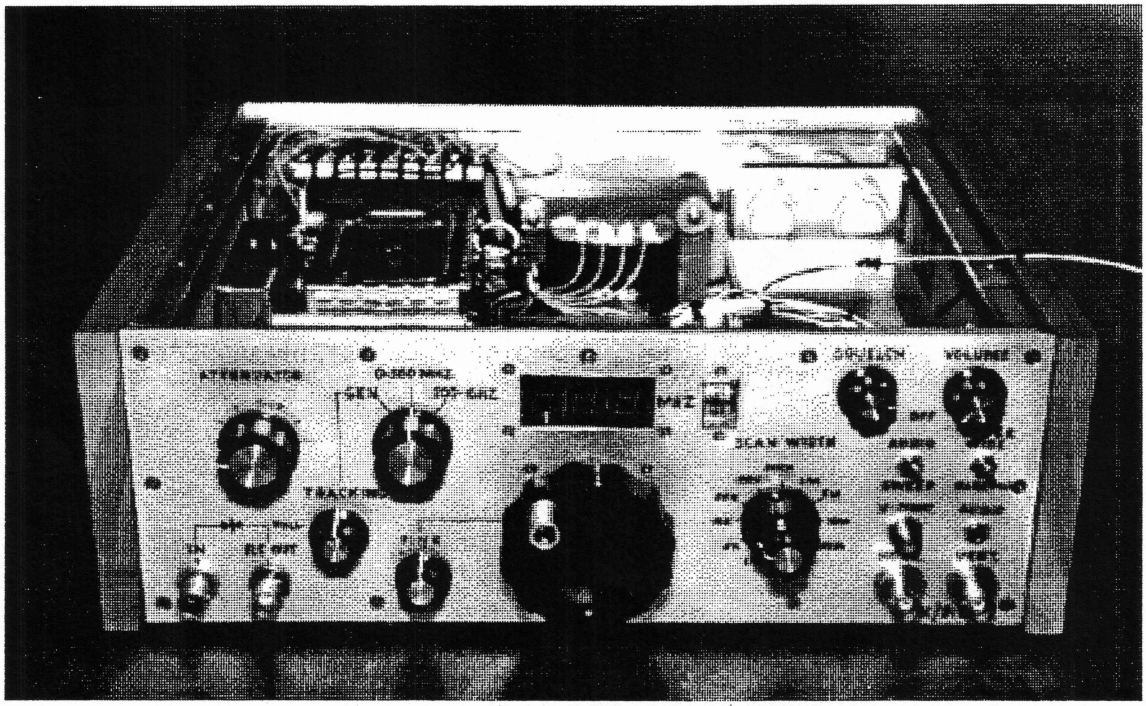

for a clean panel with no mounting hardware showing. The rest of the chassis is constructed of

the same .090 aluminum, .12 X .5 X. 5 aluminum angle, and many countersunk flat head screws.

The cherry side panels are for "dress" only and mount over the aluminum needed for shielding. I do not recommended constructing your own chassis in this manner unless you posses the equipment and skills in metalwork. The method of using a double front panel works very well and is highly recommended.

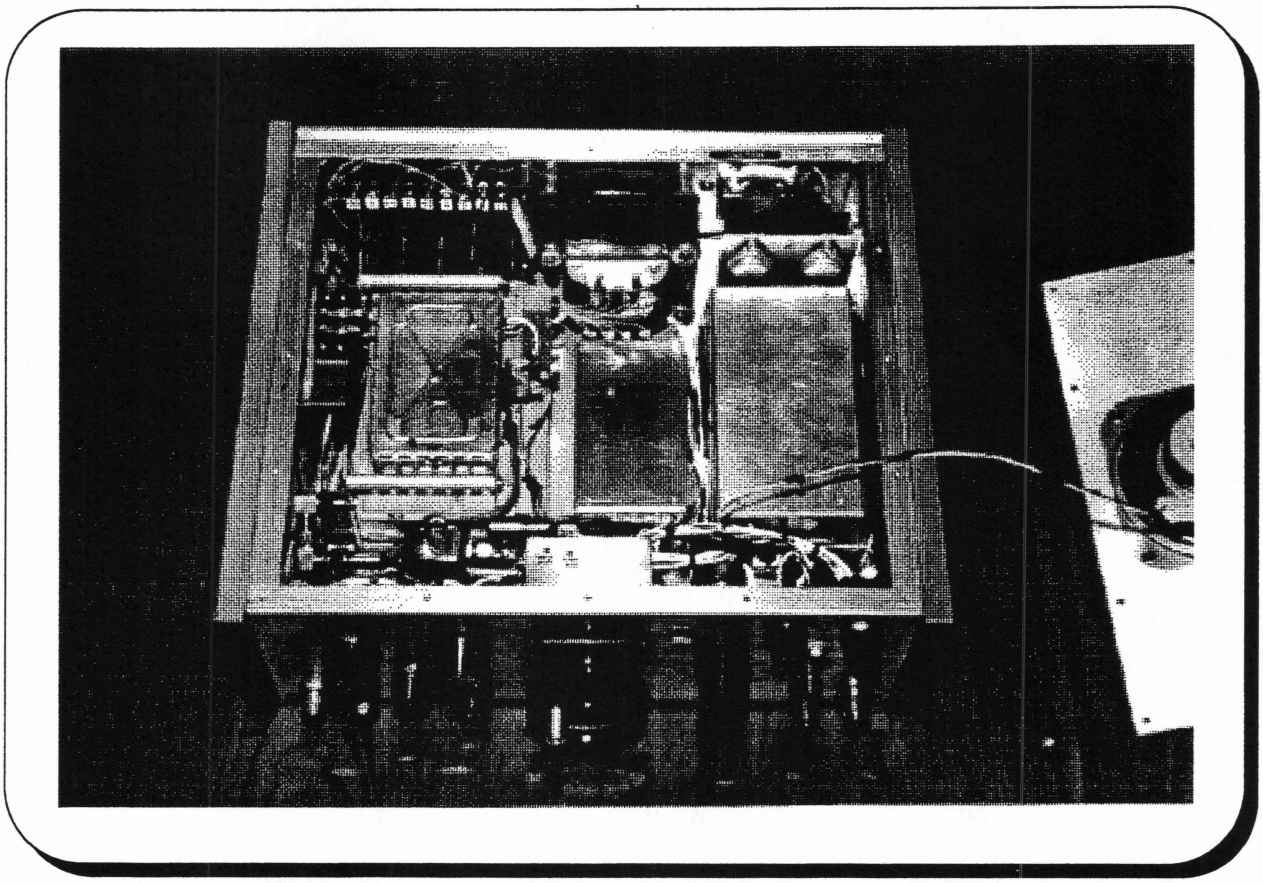

Now on to the electronics... I wish I could take credit for this being a truly original design, but I cannot. It is a combination of bits and pieces of what I felt were the best features of other designs. The choosing of what I felt was best, and the interfacing electronics are all that I can claim. I believe that this is the way many new products evolve, and there are very few 100% original designs.

The analyzer is built around three TV tuners, per the WA2PZO design. Two VHF cable tuners and one UHF tuner are used. The second VHF tuner is used for the tracking generator. The analyzer covers the range from 0 to about 1 Mhz on receive. It does this in two ranges from 0 to 500 Mhz and from 500 to 1 Ghz. The digital readout covers both these ranges. The tracking generator only operates from 0 to 500 Mhz. All assemblies within the chassis are enclosed in their own separate chassis and connected with coax. I cannot over emphasize how important this is. Some of the digital chips for the displays are even triple shielded. At times this doesn't seem

to be enough. Independent voltage regulators are used for each assembly. Feed through capacitors are used on most of the connections on the assemblies. Too much is not enough! When you are working in these frequency ranges, at these low signal levels, unexpected things happen. For example: I designed an attenuator for the input signal that I felt would more than do the job. It worked below 200 Mhz but above that it acted more like a piece of wire. I discussed it with a friend of mine, involved in radio for many years and considered to be a local expert. He let me try one of the attenuators he had built. This was not a rotary switch type, but constructed using individual shielded sections, selected by individual switches. It worked a little bit better. This is one of the areas that I have not completed. I plan on working on a design using a double deck rotary switch, the decks being spaced some distance apart with the attenuator elements placed between each switch point. Each will be independently shielded and switched on both ends. I believe this is called a "turret" arrangement. It takes time to do these things because they cannot be "breadboarded". They just have to be built and tried.

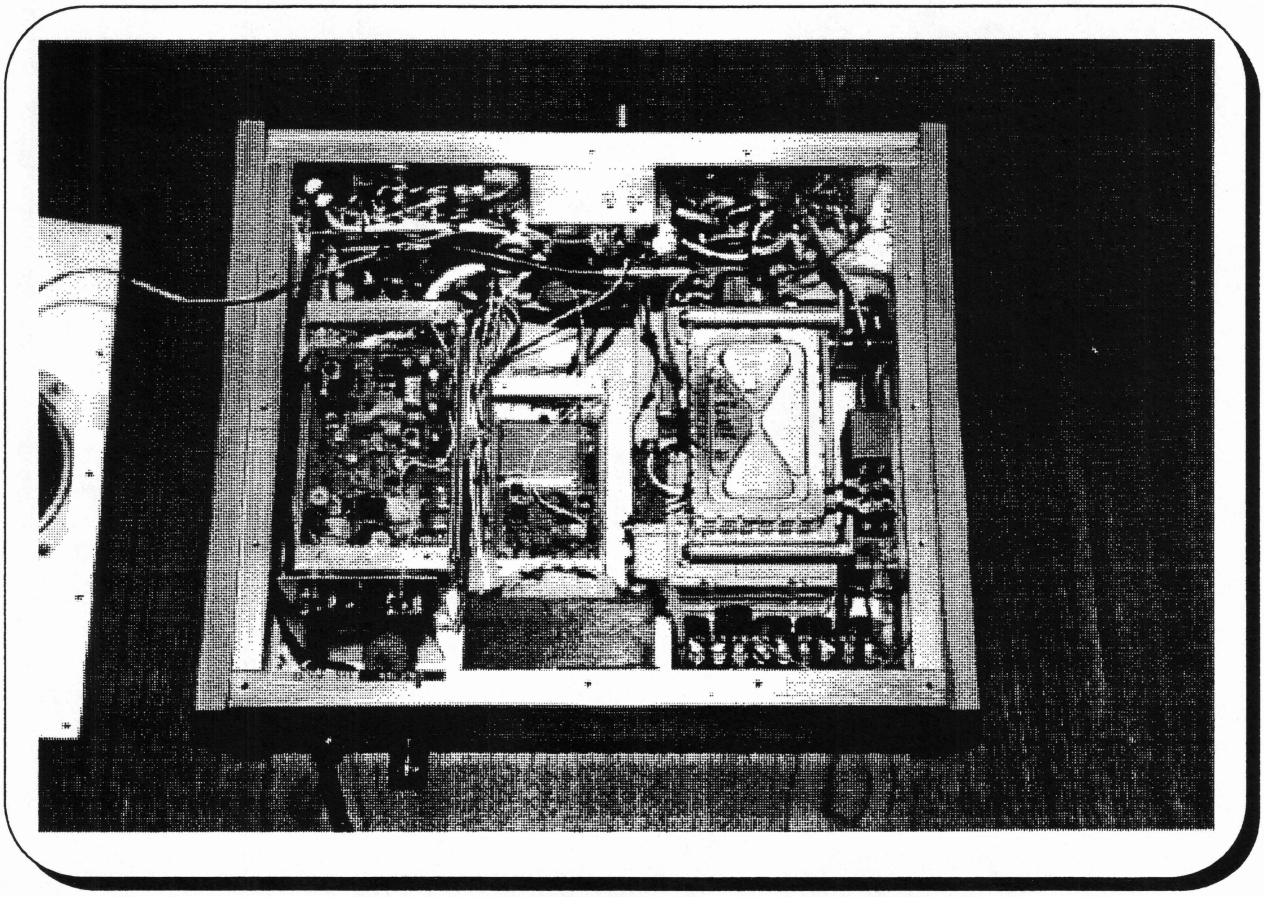

The frequency center dial is a standard high quality carbon pot. It connects to the knob through a "velvet drive" that gives about a 3.5 to 1 turns reduction ratio, without any backlash. This seems to be just about the right ratio. It is quick enough so you don't feel that it turns forever, yet isn't so sensitive it is hard to adjust. The lack of backlash is also very pleasing. There is a fine adjustment pot that works over about 2 percent of the range. it is handy to have, but not absolutely necessary. A 10 turn type pot will work. Because most of these are of the wire wound

type, you will see the results of the wiper passing over the wires in the display. A fine adjustment probably would be good to have if this type is used.

The scan width control is a dual concentric arrangement. The rear knob being a switch operating in the standard 1-5-10 arrangement.

The front knob is a pot. It adjusts over the entire range of whatever the rear switch position is set on. This is a very handy arrangement. The rear switch is a calibrated adjustment that permits comparing the relationship between signals and the pot permits zooming in for a closer look.

The tracking generator is desirable, but has presented some problems. The amplitude of the signal is all over the place. I do have some thoughts to remedy this, which I have not yet tried. One consideration was to amplify the signal to a point where it could be easily clipped, then use a FET as an adjustable attenuator to feed the output. My concern is the possibility of creating harmonics if done improperly. I guess I need a spectrum analyzer to look at the signal! This should make for an excellent 0 to 500 Mhz signal generator, with the FET acting as a fuse also.

I have used thermistors to stabilize many sections, but it still likes a 20 minute warm up. Again, shield everything. I have a shielded line cord with a good input filter. The display is a major source of noise : shield it as much as possible. Do not power it up for the first time around Christmas, unless you like to see what the RF generated by all the flashing lights in the neighborhood looks like on a scope. This happened to me and I thought 1 had some serious noise problems in my design.

RICHARD VALITES USER FEEDBACK

A MECHANICAL ENGINEER'S COMMENTS ON HIS MODIFICATIONS TO THE CIRCUITRY OF THE "POOR MAN'S SPECTRUM ANALYZER", WHAT HE LIKED AND DISLIKED, AND HOW HE CREATED A PROFESSIONAL LOOKING PACKAGE FOR HIS PROJECT.

Richard Valites
2114 Armour Drive
Wilmington ,Del 19808

2/19/91

Hi Murray,

Finally got the analyzer done and working. It was the first project I ever did I and learned a lot from building it. It certainly was worth every buck spent and I would recommend it to anybody . A number of other hams have seen the analyzer and it's capabilities and were truly impressed. It will be the focus of a ham club meeting sometime this year.

It is interesting as I write this that the Feb. 91 issue of CQ reviewed the A&A spectrum analyzer. It certainly does not have your analyzer's features and I don't know of any others on the market in kit form.

The analyzer was purchased to provide me with a better understanding of electronics through hands-on experience. I use the analyzer to check transmitter harmonic and spurious emissions and monitor the area repeaters for activity. It is also used in lieu of a scanner. The tracking generator will be used for checking filter designs.

I thought I would reflect back on the learning experience and try to make some constructive comments . Before you pass judgement on them you need to know a few things about where I am coming from. I am a mechanical engineer who left his electronics background in the classroom 20 years ago. Class of license is not relevant to electronic functional design capability. Got my extra in one year because I remembered how to study! Been a ham for about one and a half years and now enjoy electronics for the pure fun of it.

The following are worth considering:

From a learning point of view:
- It would of been nice if information on the semiconductors was given or reference to catalogues made.

RICHARD VALITES USER FEEDBACK

- Specifics to other books would be helpful ie: articles from the ARRL Handbook like the following:
  POWER SUPPLY -CHAPTER 27 PAGE 27-16
  AUDIO AMPLIFIER - CHAPTER 28 PAGE 28-6
  SPECTRUM ANALYZER- CHAPTER 25 PAGE 25-40
  INDUCTIVE PICK-UP PROBE - CHAPTER 25 PAGE 25-44

- Kits are great but did you ever talk to someone who built a Heath kit? It seems I hear the same story, they learned how to solder. A good written description could be a fine selling point as its not normally done. I don't know your intent on selling the analyzer but you could turn the project into a good lesson in electronics. Put the info on a 19 cent disk and make a few bucks!
- A complete schematic on one page would be heipful.

I know there is a lot of info available but it just makes the project that more interesting.

Test Equipment:

Please make the following comment for the calibration procedure of the read-out board. "Your digital volt meter should be of the best accuracy possible with .05% accuracy recommended". The reason I say this is that at first I used a DVM with only .5% accuracy. It drove me nuts trying to calibrate the board with it. A friend was nice enough to lend me his Fluke 8060A.
Just for info I am using a B&K 20MHz scope model 2120, a model 2210 10Hz to 2 GHz freq counter from Optoelectronics,

Construction Techniques;

RICHARD VALITES USER FEEDBACK

- A few pictures are enclosed showing the enclosure for the analyzer. Why not put your hard efforts into something nice? Maybe you could offer an appropriate box for a reasonable price? The one pictured cost $5 and the internals were worth a lot more (Hamfests come in handy)!

PS: There is room left for expansion, ... have anything to put in it?

- The front face is a metal sheet covered with two sheets of plexiglass. One side of one sheet was painted white with stencil lettering put on the front of it. The other plexiglass sheet protects the lettering from wear. (see picture #1)

- I elected to shield as best I could since intended use will be in some high RF environments and only want the antenna to pick up the signal.

UHF TUNER OSC. PICK-UP LOOP

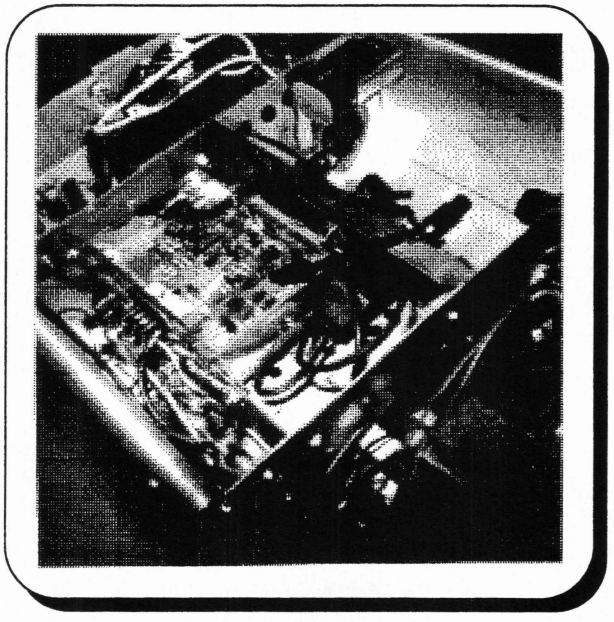

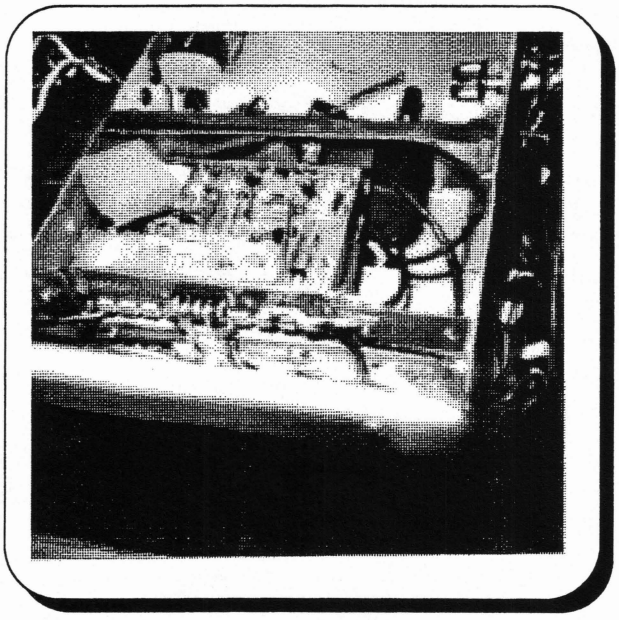

No problem with the mods as you instructed, but note how I installed the loop. It was a lot easier to do and worked the first try. Just put a piece of foam back into the tuner to hold it in place. This allows you to play with the positioning and see the results easily. (See pictures #2 & #3 above).
- I calibrated the offset to get correct readout from a local UHF station signal. My hamfest RF generator (10HZ to 400MHz) wouldn't generate any harmonics that I could see on the scope (what do you want for $7). The video and audio carrier frequencies of channel 14 thru 83 were found in Radio Shacks's

"Shortwave Listening Guide". Calibrated readout to agree with a audio carrier freq and back checked it with the video carrier. (Read on, there is a easier way).

READOUT BOARD OFFSET VOLTAGE:

- I couldn't get a steady voltage by using a 18v supply and zener diode for the lcd digital display. In lieu of this I used a LM324 to bump the 5v supply to the voltage needed. The advantage of this is a rock steady 6.10 volts +/- .002 volts after a 5 minute warm-up, (see my power supply schematic). Picture #4 shows it mounted on a small perf board. The pot opposite the battery in the picture is the tracking adjustment.

CONTROLS:

- What type of controls you have on the front panel is subjective in the operators opinion, but you may want to check out the fine tuning control. (see schematic). I assume that I am getting leak thru on C2 but with the ability to"fine tune" in the receive or analyze mode I find it to my advantage. Here is one example of receive adjustment;
  - use frequency range selector to pick 100mhz
  - use the ramp width to vary freq from 94 to 86 mhz
  - say you pick 93mhz
  - use fine tuning control to get FM staions 93.1, 93.3, 93.5, & 93.7mhz
  - I use the scope (out of x-y mode) to see the signals as it is more precise than the tuning meter

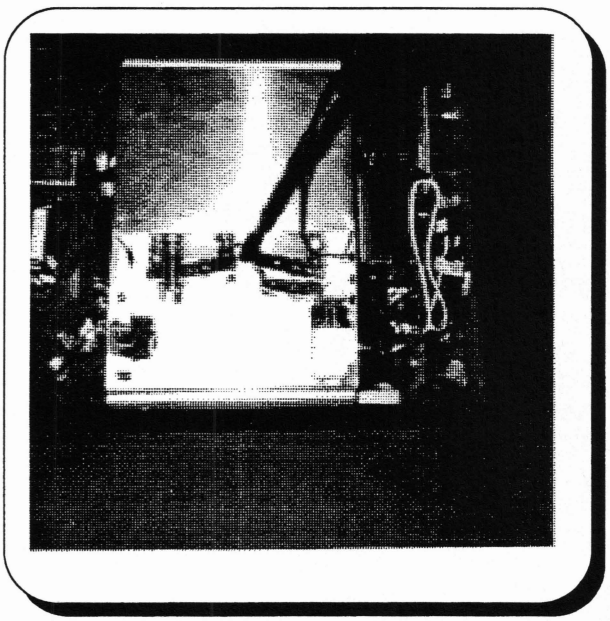

  - if a close station, say 93.1 interferes with 93.3, I use the tracking adjust control to act like a shift control
  - frequency selector switch ..... I don't recommend doing what I did to divide up the frequency range in ten parts, but with no 2 pole 10 position switch available, I used what I had. PS: I was able to adjust the pots for what was needed but it took the patience of a saint!

BAND WIDTH MARKER

SO YOU TURN ON THE ANALYZER AND SCOPE AND SEE A BUNCH OF VERTICAL LINES, YOUR CENTER FREQUENCY METER READOUT INDICATES 100 mhZ ..... BUT WHERE IS THAT FREQUENCY IN RELATION TO THE SCOPE'S GRID YOU ARE LOOKING AT??? Wouldn't it be nice to see a marker every 50MHz on the screen when you want it

so "centering" the scope display or adjusting the x channel for linear division of the graticle vs frequencies displayed?

I was about to start making a RF generator for different frequencies and thought that I could put the signal into the antenna and get what was needed. Then my 9 year old said he wanted to see the signal from his walkie talkie show up on the screen. There it was, a signal at 50 MHz (49.876 to be exact) and rich enough in harmonics that I picked up the 2nd thru the 10th harmonics. No,I didn't do what you are thinking! I went shopping and picked up a pair of childrens walkie talkies for $9.50. The ones I bought had crystals and although not of commercial quality they were good enough for what was needed.

The board from the little transceiver was put in an RF box with short leads for a 9v battery (I didn't want to run it off the power supply) and a piece of RG-176 coax, 1/2" of the shield was stripped off and used for the antenna. The box was mounted inside the analyzer case but I kept the antenna lead as short as possible to just come in the vicinity of the analyzer antenna. (See picture #4). Pushing the red switch on the front panel gives me a 50, 100, 150, 200....500 MHZ freq. display marker on the scopes CRT. (Higher harmonics are seen in the UHF mode). I know we could come up with something a little smaller or better, but then when a "poor dumb man" only has $4.50 to spend on the modification, why bother! Try it out, you may find it makes using the analyzer a whole lot easier.

Another idea I had for a marker was a beeper that would beep on every 10MHz change.

SOME OTHER IDEAS

- Four digit freq readout instead of three. The decimal point is already available from the LCD. (This is why I brought test points #2 & #3 out to the front panel).
- Active /passive antenna (take a look at Radio Electronics Jan 1991 issue) and use of the IC NE602 (page 56).
- A attenuator circuit, probably right in the front of everything, between antenna and tuner.
- RF sampler box (see ARRL handbook section 34, pg. 13). This would be nice since all transceiver checks are done via it's antenna, which by itself generates harmonics.
- A scan feature - remember, that what sets your analyzer apart from A&A's is the ability to receive. Why buy a scanner for a lot of money when you can use the analyzer?
- Preamp - Avantek, 481 Cottonwood Drive, Milpitas, CA 95035 (1-408-432-3080)
  Their IC chip is a 02170 31db @ 500 MHZ
  25db @ 1.5 Ghz

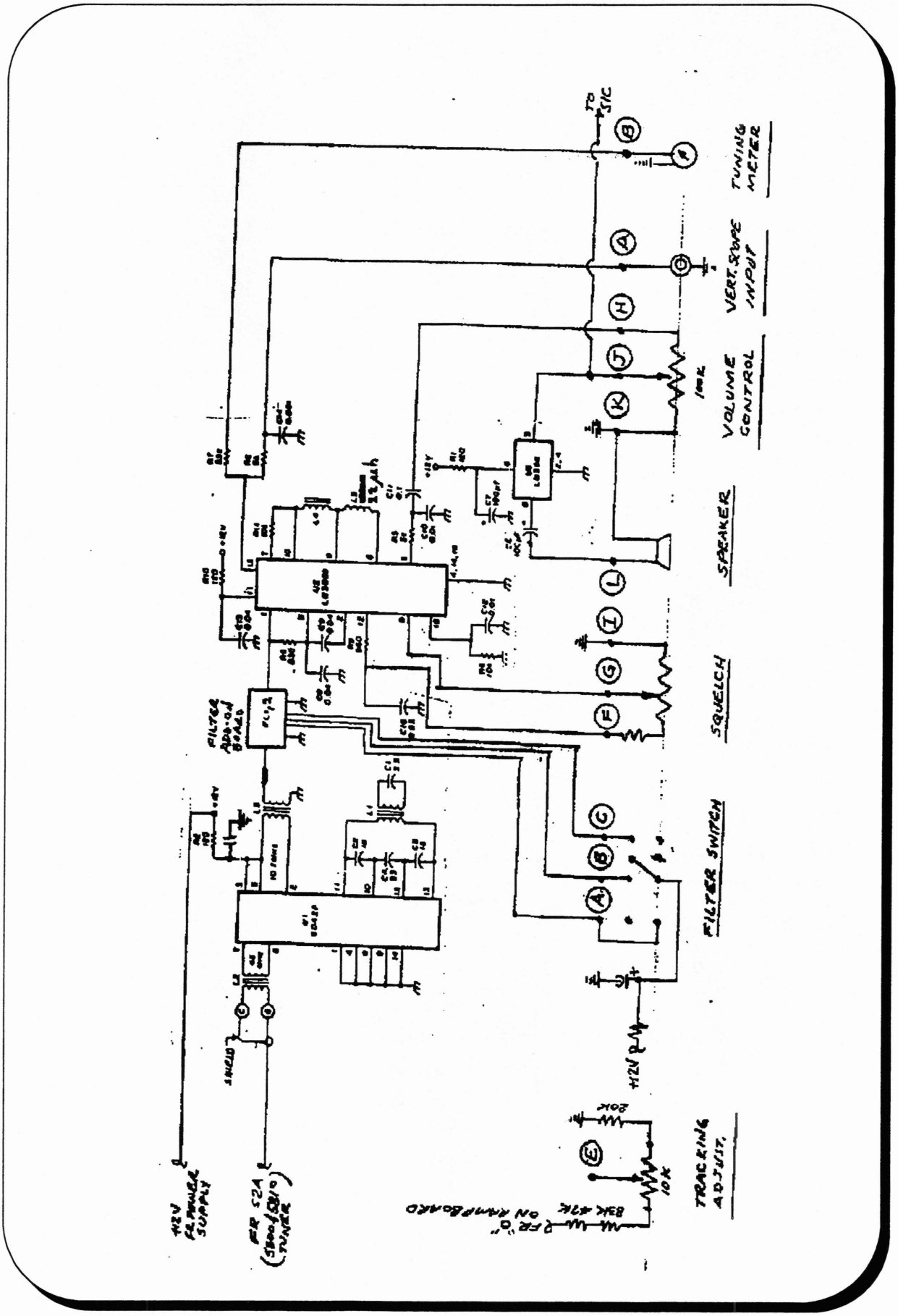
TO SIC
TUNING METER
VERT. SCOPE INPUT
VOLUME CONTROL
SPEAKER
SQUELCH
FILTER SWITCH
TRACKING ADJUST.
+12V
FILTER ADD-ON BOARD
SHIELD
+12V FR POWER SUPPLY
FR S2A (5800/5810 TUNER)
FR "0" ON RAMPBOARD
83K 47K
20K
10K

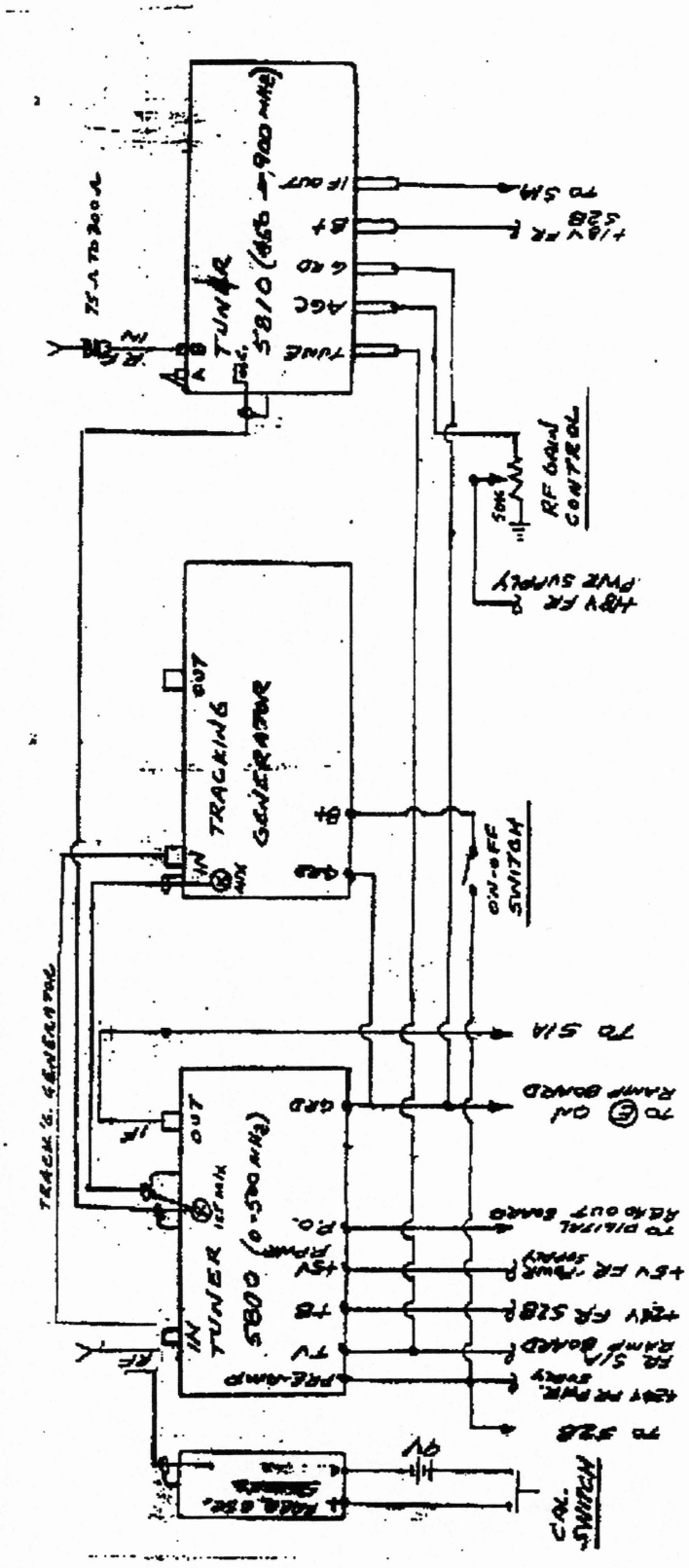
TUNER
5810 (450 → 900 MHz)
TUNE
AGC
GRD
B+
IF OUT
TO S1A
+18V FR S2B
RF GAIN CONTROL
+18V FR PWR SUPPLY
TRACKING GENERATOR
IN
OUT
B+
GRD
ON-OFF SWITCH
TO S1A
TO ⓔ ON RAMP BOARD
TO DIGITAL READ OUT BOARD
+5V FR POWER SUPPLY
+24V FR S2B
FR S1A RAMP BOARD
+24V FR PWR. SUPPLY
TO S2B
TUNER
5800 (0-500 MHz)
PRE-AMP
TV
TB
+5V
P.O.
GRD
TRACK'G. GENERATOR
CAL. SWITCH

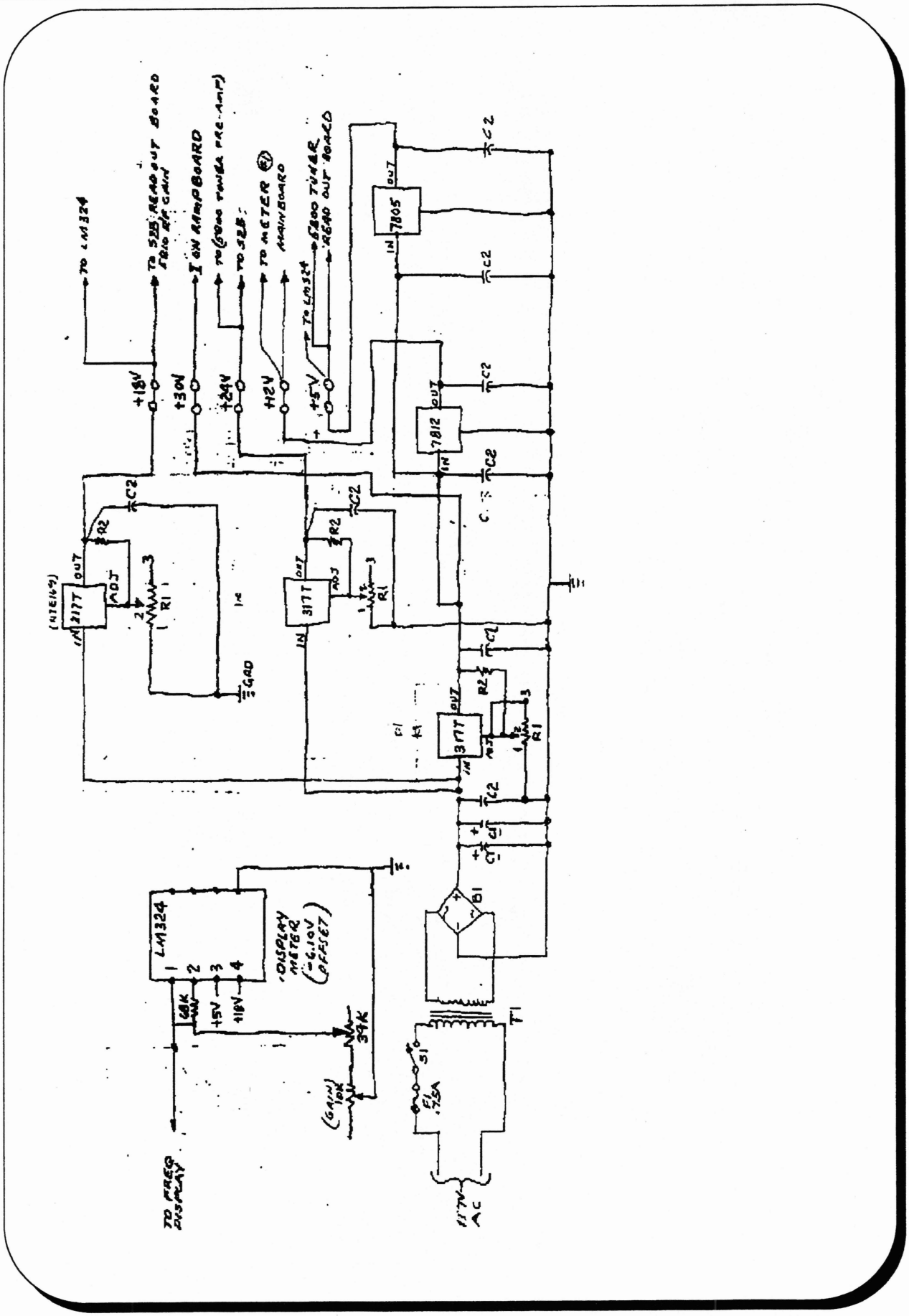
TO LM324
TO 5ZB READOUT BOARD
I ON RAMPBOARD
TO METER
MAINBOARD
TO LM324
5800 TUNER
READOUT BOARD
+18V
+30V
+24V
+12V
+5V
7805
7812
317T
217T
LM324
DISPLAY METER
(-6.10V OFFSET)
68K
+5V
+18V
34K
(GAIN) 10K
TO FREQ DISPLAY
B1
T1
S1
F1 .75A
117V AC
GND

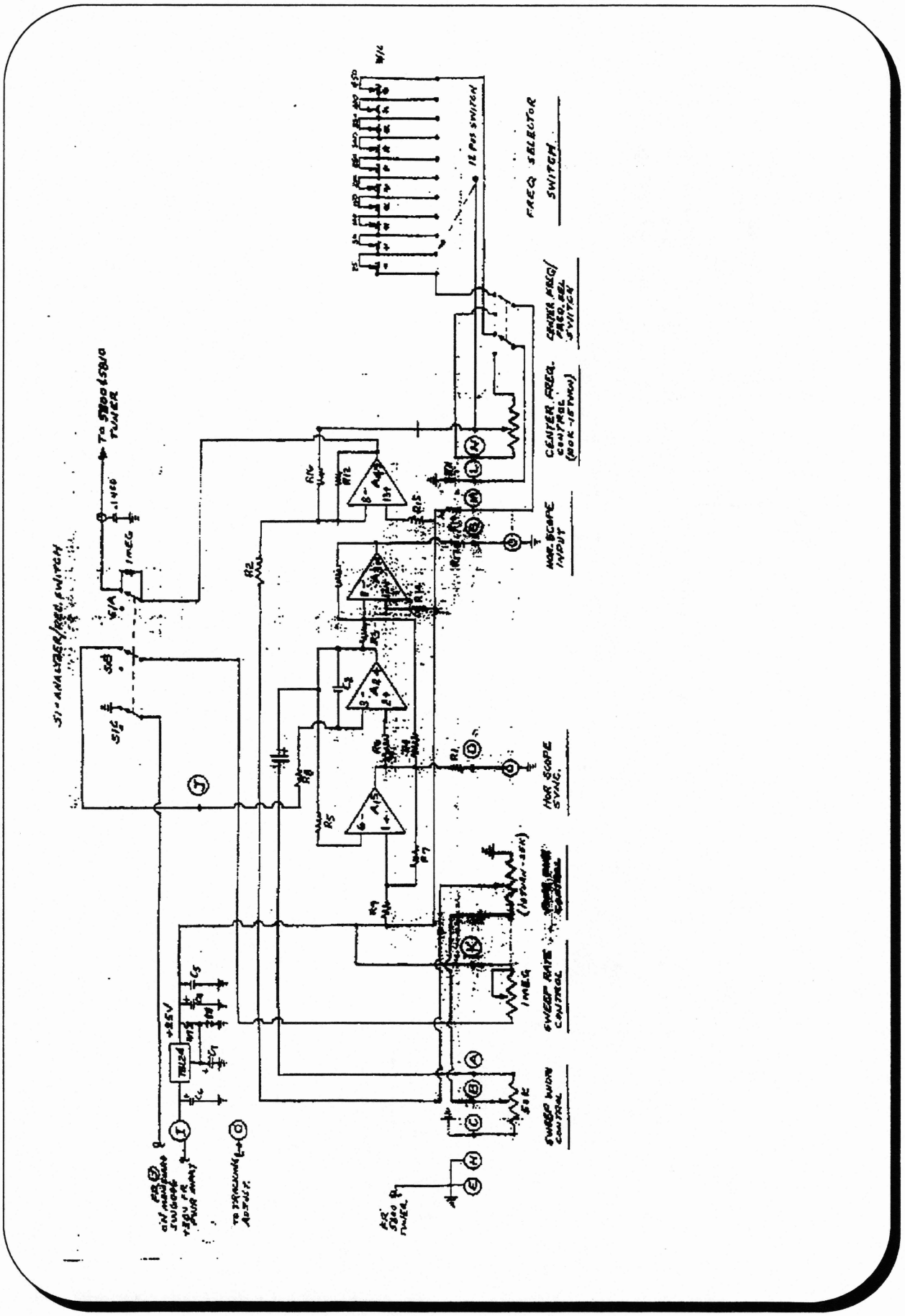
FREQ SELECTOR SWITCH
12 POS SWITCH
CENTER FREQ. CONTROL
HOR. SCOPE INPUT
HOR SCOPE SYNC.
SWEEP RATE CONTROL
SWEEP WIDTH CONTROL
TO 5800 & 5810 TUNER
S1 - ANALYZER/REC. SWITCH
+25V
TO TRACKING ADJUST.

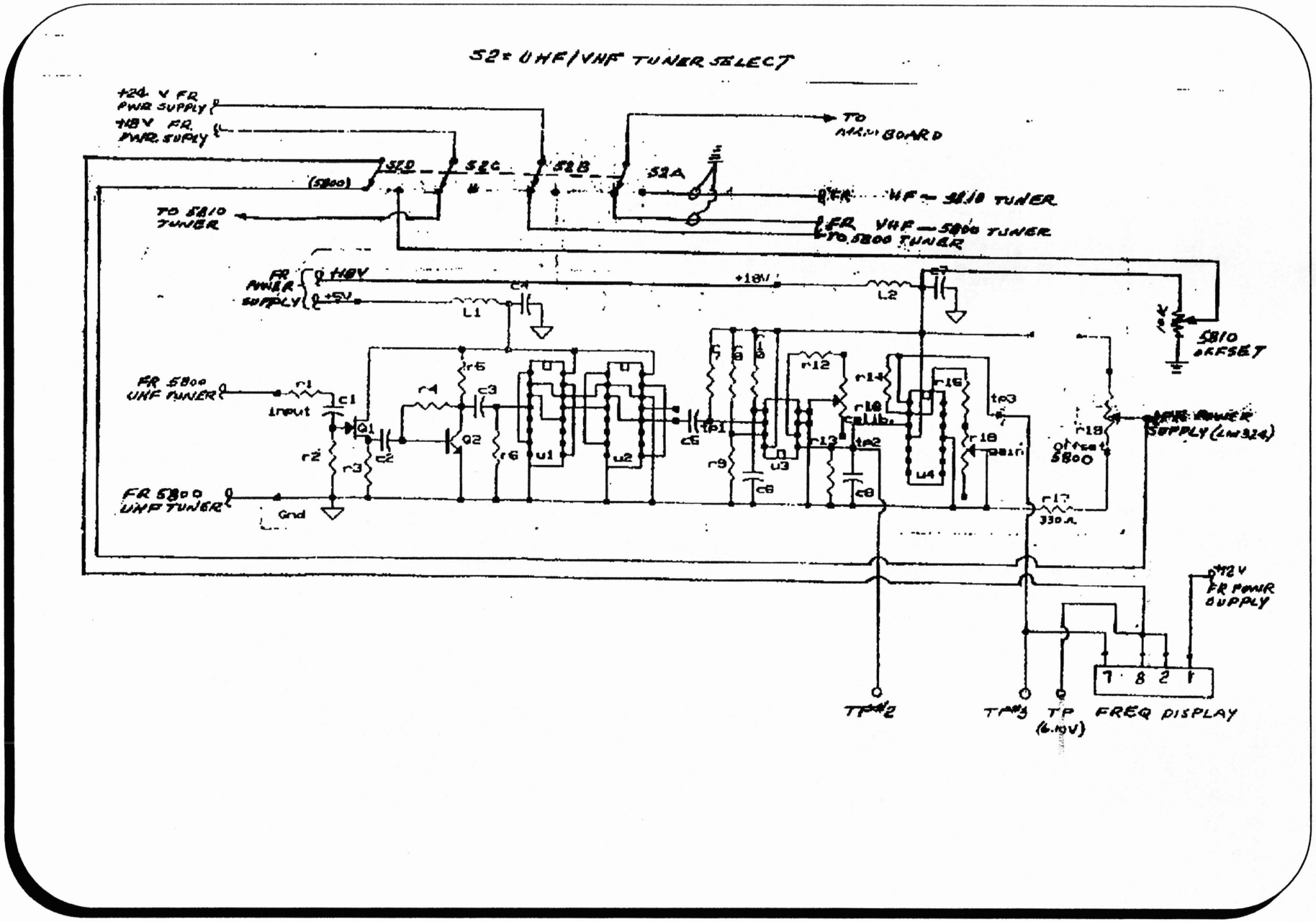
S2 = UHF/VHF TUNER SELECT
+24 V FR PWR SUPPLY
+18V FR PWR SUPLY
TO MAIN BOARD
S2D
S2C
S2B
S2A
(5800)
TO 5810 TUNER
FR VHF — 5810 TUNER
FR VHF — 5800 TUNER
TO 5800 TUNER
FR POWER SUPPLY
+18V
+5V
L1
L2
C4
C7
5810 OFFSET
FR 5800 UHF TUNER
r1
input
c1
r2
r3
c2
Q1
Q2
r4
r5
c3
r6
u1
u2
c5
tp1
r9
c6
u3
r12
r13
tp2
c8
r14
r16
r18
gain
u4
tp3
r19
offset 5800
FR POWER SUPPLY (LM324)
FR 5800 UHF TUNER
Gnd
r17
330 Ω
+12 V FR POWR SUPPLY
7 8 2 1
TP#2
TP#3
TP (6.10V)
FREQ DISPLAY

It is an expensive chip ($35) but I wonder if their MAR series with a higher noise figure would be good enough. It is down in the $3 range. Again, the place to do it is right in the front end, but this is the first IC chip I found that would work over the full range of the analyzer.

- Marker generator - see Jan 1991 73 Amateur Radio for a different way than what I did.

Attached is a SASE envelope, if you have any info you may want to share, or have questions on.

TAKE CARE,

Rick NY3P SHACK

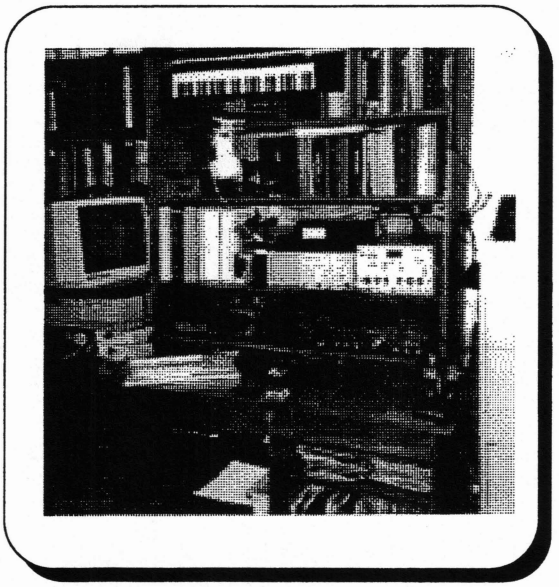

TERRY NIXON USER FEEDBACK 1

Terry describes in great detail the modifications he made, the applications he found for the Poor Man's Spectrum Analyzer and Tracking Generator as well as the clever way that he used a 50 cent flea market, surplus enclosure to package his project.

WB0VQP
Terry Nixon
1923 Walling Court
Davenport, Iowa 52803

Murray;

When I first saw your Ad in "Nuts and Volts" magazine, I admit I was more than a little skeptical of a working Spectrum Analyzer built from a modified cable TV tuner. My wife bought me the kit as a Christmas present. However, I admit now that I am more than satisfied with the product of your genius, and my labor. The piece of equipment does work, and work well. I assembled the boards, then interconnected it 'breadboard style' on my work bench. Some of my friends thought that I had turned into a mad scientist when they saw the maze that I had made. Even though it was a total mess the way I had temporarily assembled it, it still worked.

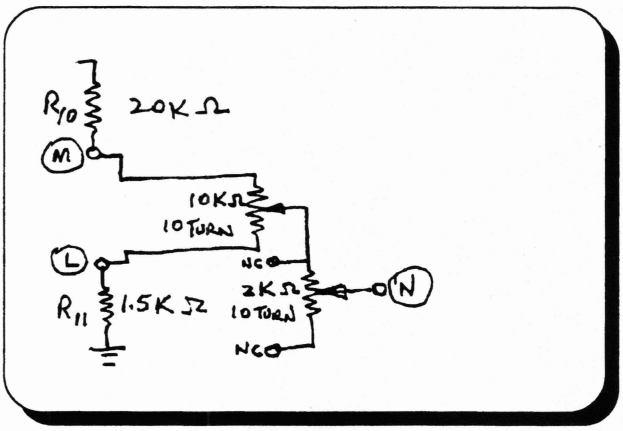

I did make some changes that I think are worth mentioning. For tuning, instead of using the range switching arrangement that you suggested, I made mine continuously tuneable, so I experimented with various pots. I happened to have some precision 10 turn pots laying around so I connected them so that the 10 turn 10K Pot was the coarse frequency control, and the 10 turn 2K pot was the fine adjust control.

I also discovered that I needed to make some adjustments in the resistors on the voltage divider which surround the Tune control. I changed R-10 from 68K, to 20K, and R-11 from 6.8K to 1.5K. These changes to the Ramp board gave me a smooth-tuning Analyzer with no dead ends at the top or bottom of the pots, and seemed to stabilize the Analyzer tuning control, so that touching it did not make it jump, as did the larger values of pots I experimented with.

TERRY NIXON USER FEEDBACK 2

Another major change I made was in switching. I elected to incorporate both tuners in my unit. I had some miniature gold plated relays and sockets available with 12 volt coils. I used one of them to switch the proper tuner output to the Analyzer Board, and to switch the 18 volts to the proper tuner being used, and also to switch the 5 volts on and off to the prescaler pin on the SW-5800 Tuner. The use of the relay did two things, first, it allowed me to use a simple

switch on the front panel, and allowed me to easily troubleshoot any problems which might develop.

I am including some photos of my finished unit, of which I am very proud. I used the cabinet of an old RCA tube type dot-bar generator which I purchased at a club auction for fifty cents. I completely gutted the chassis.

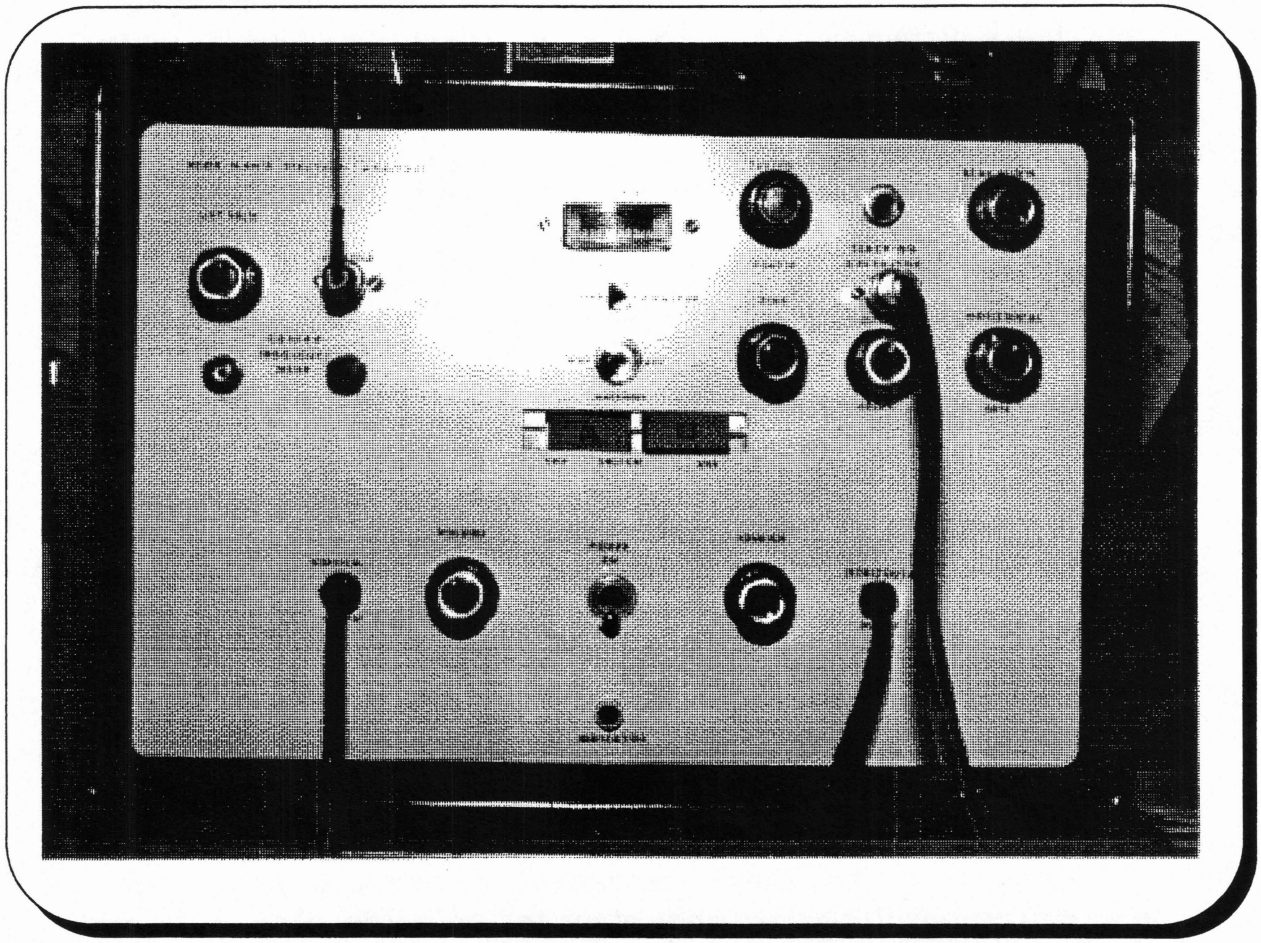

Underneath the chassis, I mounted the power supply which I constructed. Note that I regulated all outputs of the supply with either LM-317's, or 7805, 7812 series regulators, which helped stabilize the unit. I mounted the tuners one on

top the other using double backed foam tap, which my wife graciously contributed to the project. (The tape is cheaper in big rolls at the craft stores.) I built the shielded box for the Analyzer board from phenolic circuit board scraps. The Ramp Board was mounted on top of the case of the Analyzer board, again using the tape, and the Center Frequency Readout Board was mounted to the top of the tuners. With careful planning, I was able to just turn the front panel around backwards, and use all existing holes in it, plus locate the others in convenient locations. I used the Rub-on lettering kit that Radio Shack sells to mark the front panel. (I was almost blown away by a tornado during a long lettering session). I sealed the lettering with spray clear acrylic from a can. A speaker was installed in the top, along with a headphone jack, and a recording level jack for secret squirrel operations. Since I didn't use your digital meter circuit, I installed pin jacks on the front panel to stick my probes into. The Vertical and Horizontal Output cables that go to the scope were also run through existing holes with rubber grommets installed. The knobs chosen were from my deceased Aerotron collection. I think you will agree that this made a nice looking, portable unit. I demonstrated it to the Davenport Amateur Radio Club of which I am a member, and it got raves. I also used a Radio Shack A-B switch box to switch the incoming RF to the proper tuner. Given the frequencies involved I naturally wanted to minimize the losses. I just read your article in the July '90 issue of ATVQ, and realized that room exists to insert a preamp inside my unit.

Now for some suggestions... I mentioned I just today read your article in ATVQ. I too had thought about the outboard attenuator. I am including some information on a step attenuator which was written up in the September-October '86 edition of "Popular Communications" magazine on building a 75 ohm step attenuator. I knew I had the information somewhere, but it has taken a while to locate it. I will build one of these to see how well it works with the unit. I also had in mind a Marker Generator, but something on the order of a crystal calibrator with outputs of l00 Mhz, l0 Mhz and l Mhz, with germanium diodes on the output to generate harmonics. This would be a way to check the accuracy of your readout. I had a Spectrum Analyzer which I had procured as Air Force surplus through CAP, and it had such a marker generator on it, with front panel switches to turn one or all of it's outputs on as you chose. It didn't work well for my purposes, as it was made for cable TV use, and it had the sensitivity of a rock. Perhaps that is why it was surplus.

I equipped my unit with BNC connectors. I am considering replacing them with chassis mounted dual BNC female connectors, which would better shield the input and tracking generator output. I have been using a BNC Tee connector to couple a rubber duck antenna, the tracking generator, and the input together. It is surprising that most 2 meter rubber ducks I have looked at are matched better at l55 Mhz.

TERRY NIXON — USER FEEDBACK 4

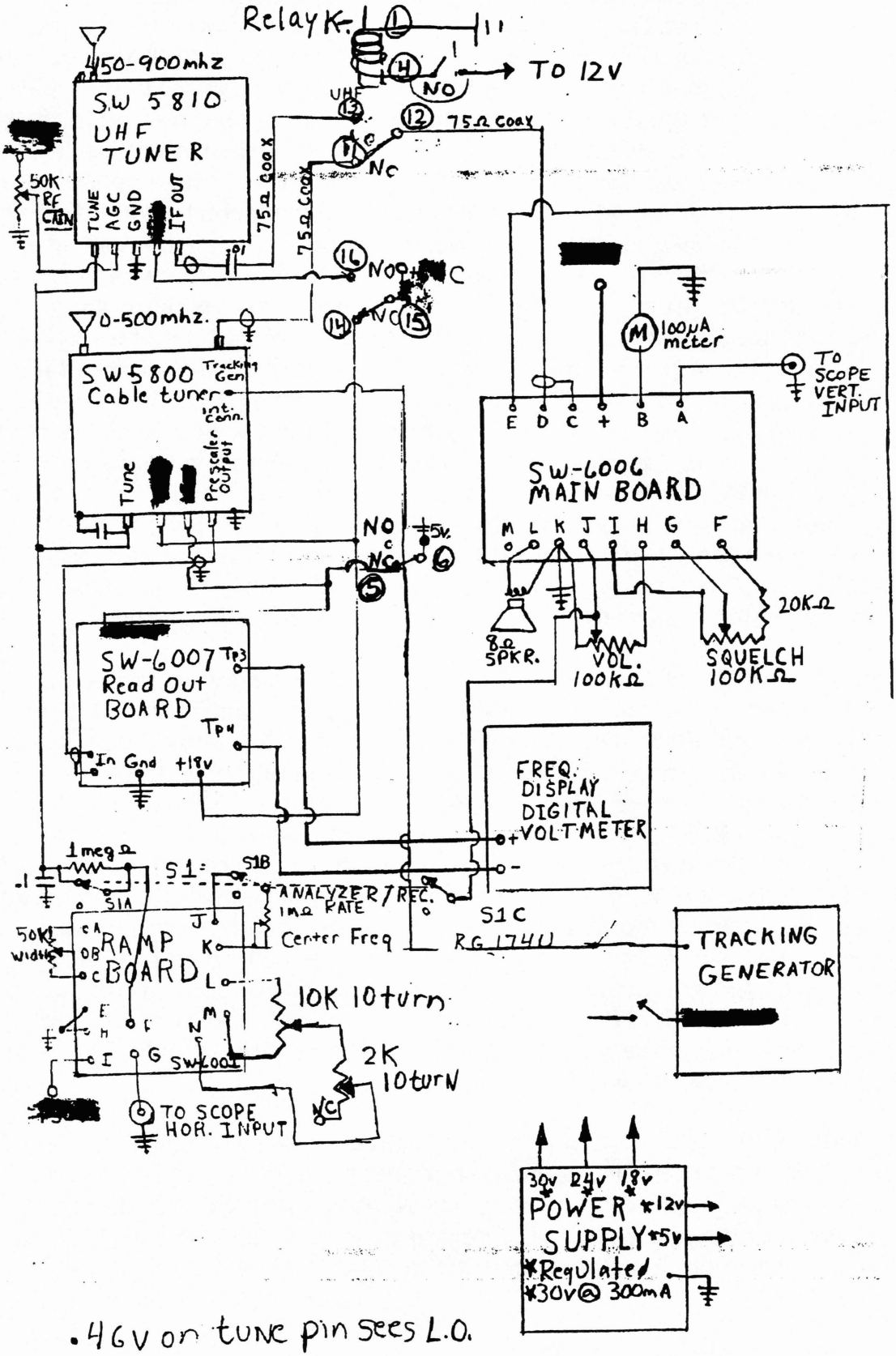

• 4GV on tune pin sees L.O.
voltage pin N - Ramp
9.5 - 1.1 V

+5v AND 18volts
MUST BE REGULATED

TERRY NIXON USER FEEDBACK 5

I am also interested in hearing more about the external bridge to be used for antenna work. Since my Tracking Generator is not mounted on the top of the stack, perhaps the bend in the coaxial cable, or the stray capacitance developed with bending the cable 90 degrees, and running it along the top of the metal cabinet is having a toll on it. Any suggestions?

Another little problem I have been having is in the readout board. For some reason,. mine seems to drift a bit. I am not too sure the source of that problem yet, but I am going to open up the unit, and hang a meter on some points and record voltage reading for a couple of hours to see if it is a voltage problem somewhere first.

As I told you on the phone some time ago, I have used your unit to successfully realign the bandpass filtering of some Azden PCS 4000 transceivers I had to work on. I would not have been able to do it without the unit.

As I said earlier, the unit works, and works well. As I have told you, I have a couple of small problems, but that is to be expected in any unit as complex as this one. This unit does everything you said it would do, and even more. I find the more I have to play with it, the more uses and applications I find for it. As you advertise, there are trade-offs, and it is not a $I0,000 machine, but it performs many of the functions that are performed with the more expensive machine. I find it particularly interesting to note the distortion on signals on the C.B. band, caused by screwdriver mechanics working on their radios.

I am enclosing my check for the SW60I0 Switched Filter Kit which should be a great improvement to the unit. Also in your article in ATVQ magazine, there was no price on the MSG-I00 Marker Generator. I am still looking to see if I have room in the cabinet for it.

Sincerely yours;

Terry Nixon
Police Officer
WB0VQP
Communications Officer IA.Wing CAP
FCC Commercial # PG-I8-2I895

TERRY NIXON USER FEEDBACK 6

When Terry heard that we were planning to put this book together, he sent in the following new ideas:

Nov. 11, 1991
Murray,

Find attached another "Brainstorm" I had for your book. With the Tracking Generator, this would let you look at both the Rx & Tx side of Duplexers, or the signals in and out.

I got this idea from the duplex offset available on some Service Monitors.

I'm looking forward to seeing your book on mods and applications. If I keep adding to mine, I'm going to have to put it in a bigger case.

73
Terry, WB0VQP

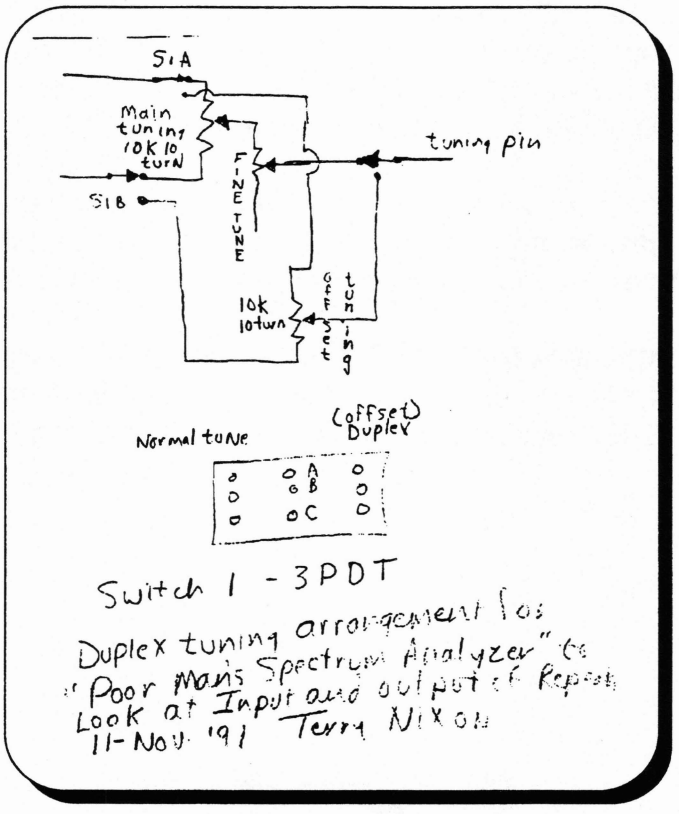

TERRY NIXON — USER FEEDBACK 7

And even more!

12-11-91

Murray;

Just had a "flash" idea. I am going to work on it when I finally get my bench back together.

Why not record the audio output, and provide an input to replay it, thereby making a "magnetic storage unit" from a cassette recorder. I've got my workbench cleared, am just finishing building all new benches (was tempted to put in hydraulic lift with a 7 day timer - If it lays there longer than a week - DUMP IT!)

Looking forward to seeing your book.

'73
Terry

There's no end to the creativity out there!

I like Terry's idea of recording the Spectrum Analyzer's display with an audio tape recorder. I've been thinking of using a stereo tape recorder, using one track to record the Main Board output that is applied to the vertical input of the scope, and using the second track to record the trigger (hor. sync) pulse output of the ramp board to trigger the horizontal sweep of the scope. Hope to have something worth talking about in the near future.

If you have played with this idea, we would appreciate hearing about it.

Mike has come up with some fine modifications which, I will probably incorporate into my boards next time around. He also sent along some photos of his unit.

Mike Sharki
KB7TG
616 Madison #C
Hamilton, MT 59840
406-363-642

23 March 1991

Murray,

Hi How's everything back east? I finally got everything put together after all these years and the Spectrum Analyzer and Tracking Generator work just great. Better than I had imagined. I made some changes and I realize that after all this time, you probably have already come up with similar modifications. But I thought you might be interested in how I approached it. I have used the equipment for all kinds of work and even tuned a 2 meter duplexer. Was a snap! Handiest piece of gear I have. To obtain a linear sweep, I used a current source. The changes are in red. Be sure the capacitor is a high quality one. Also a fine tune control was added. The output amp. is now a noninverting amp. with a level adjustment, instead of a summer. This eliminated any shift of the center frequency when switched to receive mode.

In receive mode, there is always a trace so you can use it as a tuning meter and also see a good sync and burst of a TV signal.

When I added the tracking generator, I changed the main board a bit so I could center the IF with the tuning diode.

Most of the changes have notes by them so I can remember what I did.

It appears to track pretty linearly over most of the entire range and I am real happy with it's operation.

Thanks for coming up with a great piece of test gear.

Mike Sharki KB7TG

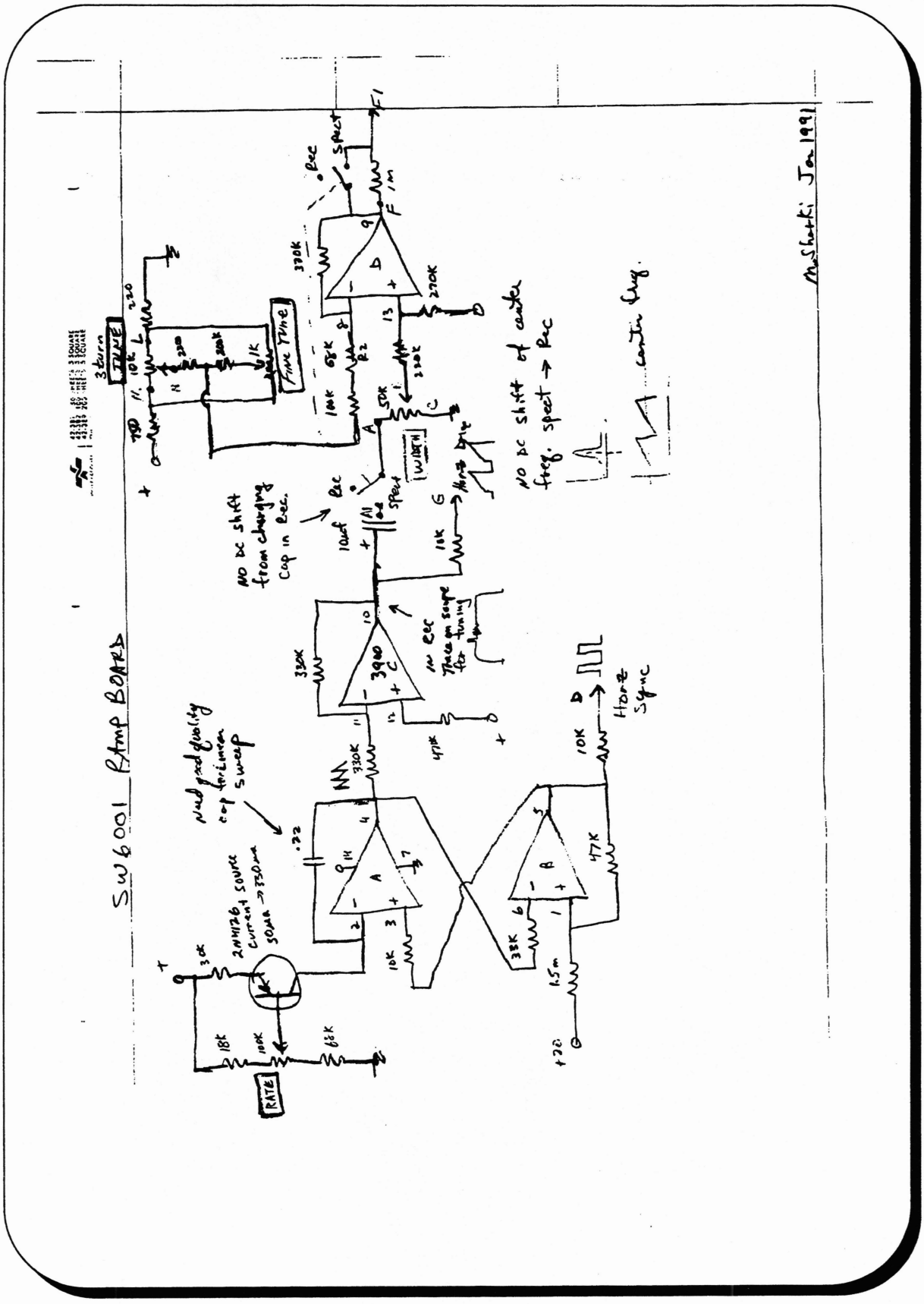

Sharki's modified Ramp Circuit.

Track Generator

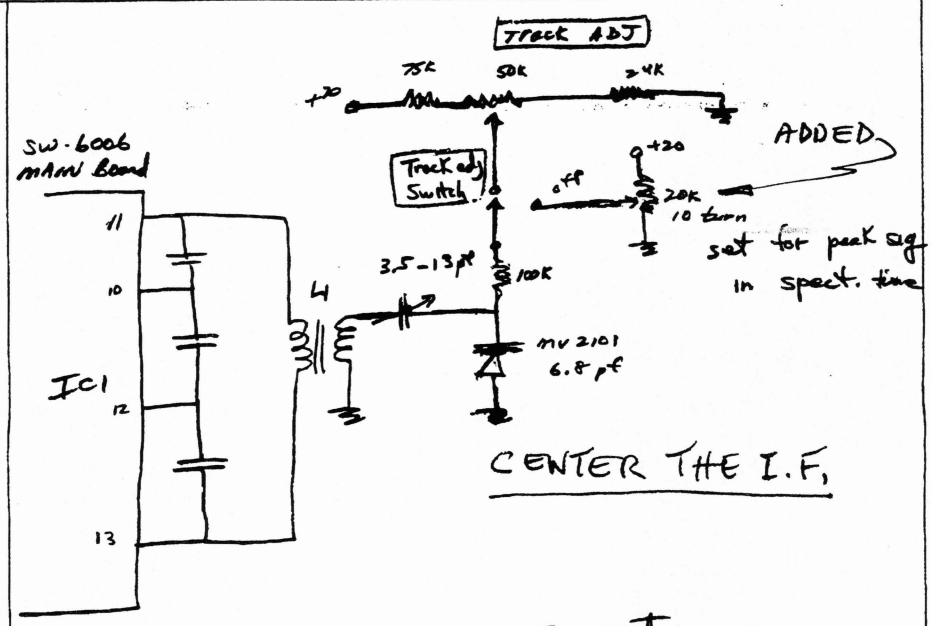

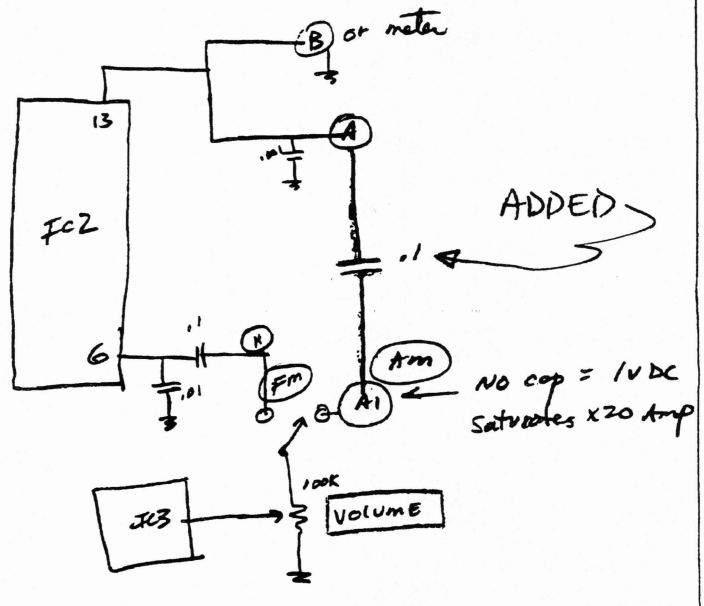

AM-FM SWITCHING. MS Jan 1991

MIKE SHARKI

USER FEEDBACK 4

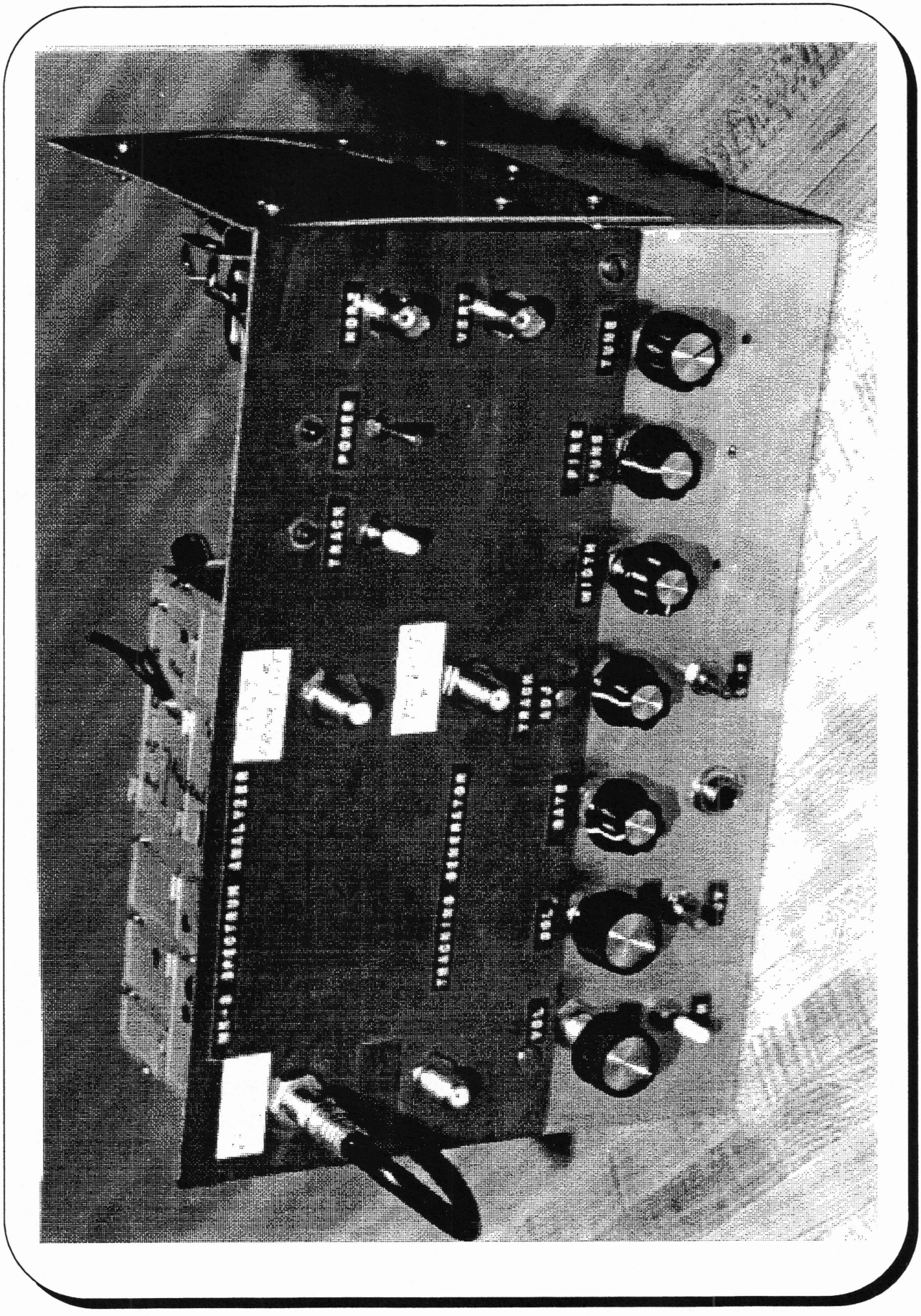

MIKE SHARKI USER FEEDBACK 5

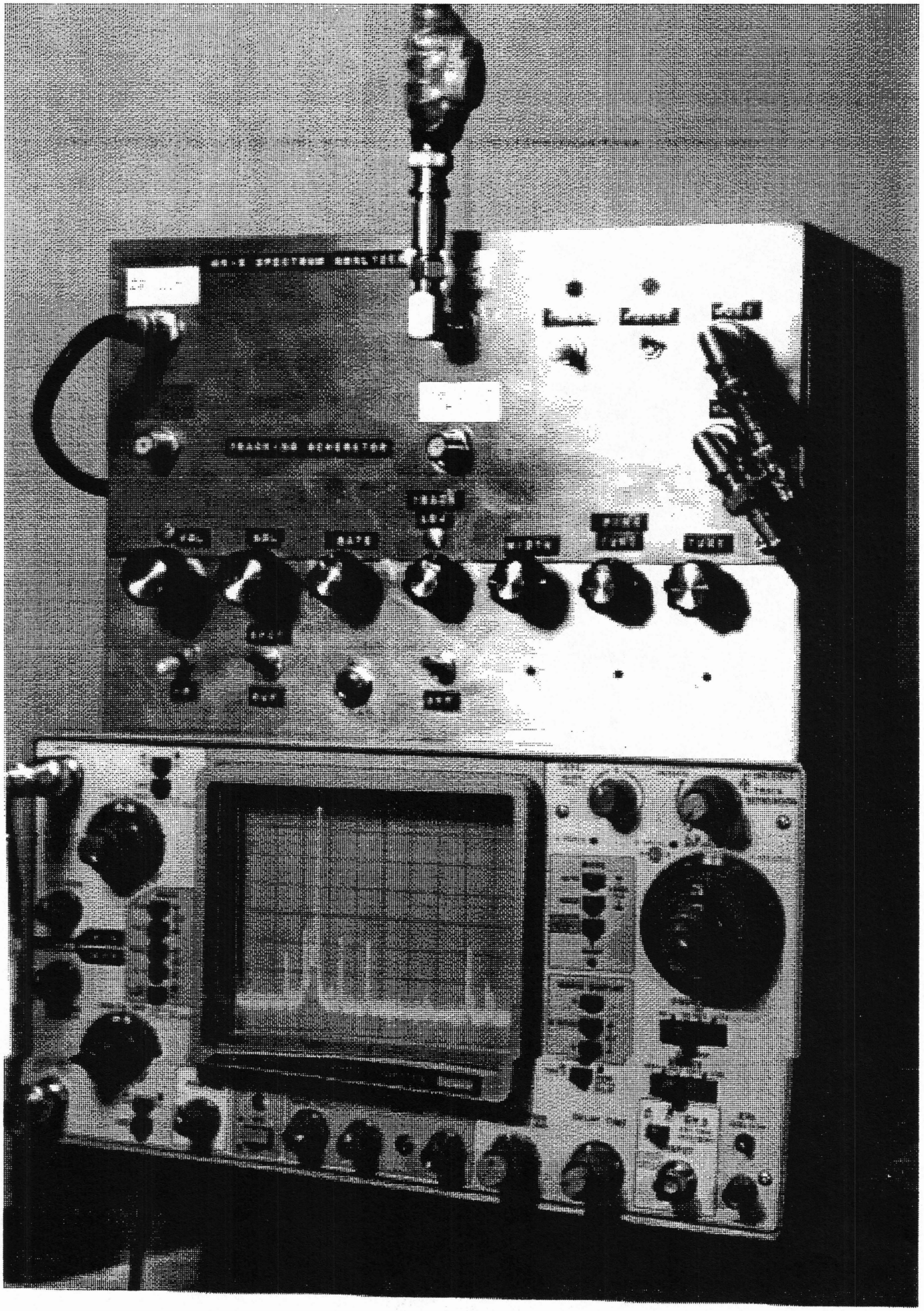

DON MORAR USER FEEDBACK 1

Don (W3QVZ) lives on top of a mountain (I think he said "mountain" ..... anyway, at some high elevation) and has an antenna farm in Great Cacapon, West Virginia, away from most local sources of man-made RFI. One of his many interests is RADIO ASTRONOMY. DON has written many scholarly articles on the subject in ASTRONOMY magazines. He is also a dedicated "do-it-yourselfer". For years I've played with the idea of converting a TV or computer mono monitor into an X Y display for use with the Poor Man's Spectrum Analyzer with varying degrees of success. Never to the point where I felt I had a worth while solution. Well, DON's done it! He describes his logical approach to the problem and how he solved it.

SOME THOUGHTS ON X-Y MONITORS USING CRT'S

The need for X-Y monitors in my endeavors became necessary when I decided to design and build two radio astronomy receivers which were to be used as spectrum analyzers as one of their various functions. I also wanted an X-Y monitor of fair screen size for displaying the output of a curve-tracer that I use for testing and selecting matched solid-state components.

Various X-Y monitors (my favorite being Tektronix), are available on the surplus market, at Hamfests, Computer Fests and the like. New units are generally too prohibitive in cost for most amateur experimenters. In addition to being able to provide large display areas, i.e.. 10 - 16 inches on diagonal, there are other various advantages, such as measurement accuracy, photographic aids, and memory displays if one is fortunate enough to find a well functioning unit at a reasonable cost. More an that later.

I decided to try my hand at improvising a complete X-Y monitor with certain reservations:

1.) I didn't want to start from scratch, but rather, to modify an existing TV receiver or computer video monitor, since I had several.

2.) To use the maximum of the existing circuitry on the unit to be modified.

I started with a new, unused Sony video monitor. I had picked up two for $10 bucks a piece. After looking over the schematic, which was fairly typical as video monitors go, I first set about to modify the vertical & horizontal sweep circuits, to free-up the V & H deflection yoke for my particular X-Y applications. The vertical circuitry was left untouched. Fortunately the horizontal circuitry essentially came out the same way, except for adding one jumper, (see schematic) thereby leaving the 15 KV Hi-voltage intact for supplying the 2nd anode of the CRT. In general, this will not always be the case. Sometimes, the yoke is an integral part of the HV flyback power supply system and cannot be so readily removed. In the early days of television, there were two techniques used for the CRT Hi-voltage generation.

A). A conventional 60 hz, 1/2 or full wave rectifier supply, or
B.) An RF type supply, (typically 200 khz).

These were soon abandoned for various reasons, and the energy stored in the horizontal output transformer and/ or deflection yoke during horizontal flyback time was utilized. If one had an old monitor utilizing either of the above types, the yokes can be used in any manner without affecting the second anode voltage of the CRT. Even Tektronix scopes, all during the vacuum tube era, used an RF type HV-2nd-anode supply that could stand alone. So much for that.

The next primary consideration is what to do about the required circuitry to drive the H & V deflection yoke. In my particular applications I would only require the capability of driving the Horizontal windings of the yoke at a maximum of about 100 sweeps/sec, and the Vertical windings at about the same rate. I decided to try for writing rates, on both axis of about 2 khz, to handle the fastest rates of change that I would encounter in either the Vertical or Horizontal waveforms. This would provide a reasonable approximation, without totally unacceptable wavefonm distortion. The next requirement is to determine how much current will be required to deflect the beam in either axis from edge-to-edge of the CRT. Since I would be dealing with slow speed sweeps in my spectrum analyzer applications (minimum of 1 sweep in 10 seconds), this meant the amplifier and power supplies in question must be capable of supplying essentially steady-state d-c. I used a 0-15 volt, 0-5 amp, well filtered bench test power supply, and connected it to the Horizontal deflection coil, through about 5 ohms of external resistance, since the winding itself measured only about one ohm, d-c resistance.

The measured current required to deflect the beam horizontally from the center of the CRT face to either edge was +/- 1.5 amperes, or 3 amperes for a full sweep. The d-c resistance of the Vertical windings (which measured 8 ohms), only required +/- .75 or 1.5 amps total for the same vertical deflection. I now knew the requirements for the Vertical & Horizontal amplifiers and the power supplies. The obvious choice for these amplifiers was to use power op-amps, using +/- power supplies. I could not find any op-amps that could handle the required steady-state current of 3 amps in my first search. There were larger units available, (10 amps and higher) but they were too costly. I tried several non op-amp approaches, which were not satisfactory. I finally found the right device, at a reasonable cost. It is a Cherry semiconductor power op-amp. See accompanying data and my circuit with listed measured characteristics. Small quantities will probably be in the $3 to $5 range.

The power supply portion of the circuit is fairly standard. Because of size constraints, etc., I decided to try to get away with part of the supply system being unregulated, which worked out pretty well. Ideally, all supplies should be regulated. I could not find a 5 ampere negative regulator which resulted in the use of the unregulated sections. 5 ampere positive regulators are available and reasonable in price, but I could not find their negative counterpart. If anyone knows of one, please let me know.

One feature that might catch your eye is the .15 FARAD capacitors shown, required to hold-up the +/- 10 volts for the power op-amp supplies, and keep the ripple at a

X Y - Monitor

Modified video monitor - shown out of case.
All controls on bottom row added by writer

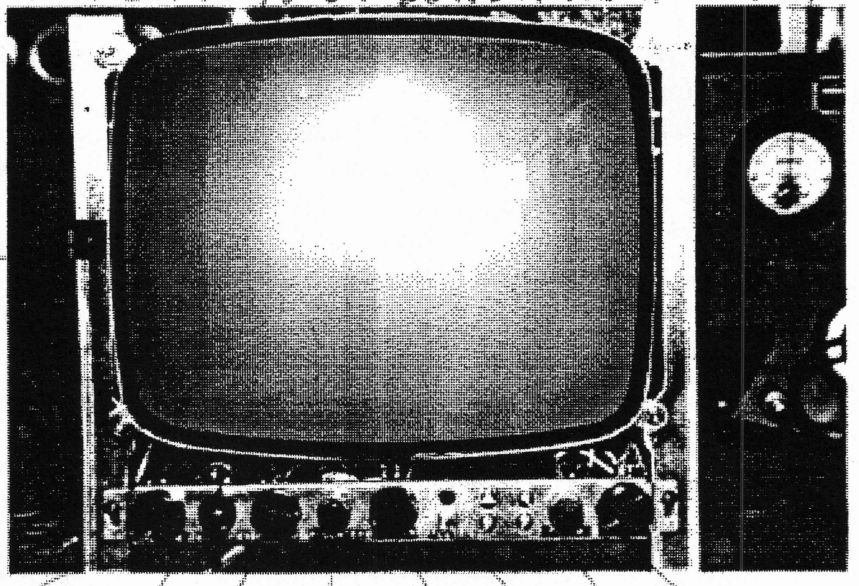

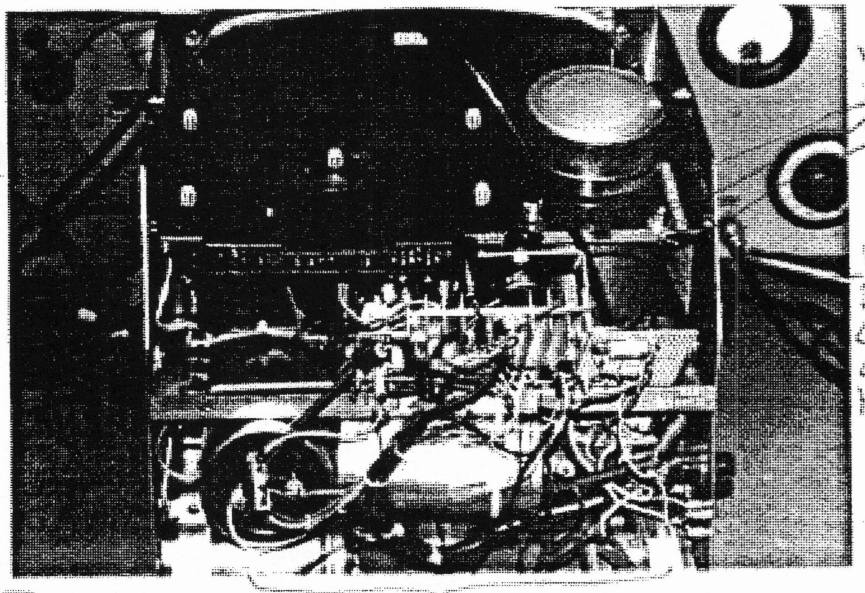

reasonable level. These capacitors are not gigantic, since they are lo-voltage (10 volt) electrolytics available from Fair Radio Sales in Lima, Ohio. It is necessary that you use 317/337 +/- regulators for the Vertical and Horizontal centering circuit of the CRT (see schematic).

The rest of the video monitor, was designed to operate on +14 volts. It requires about 2 amperes for operation. I used a separate transformer and filtering to supply its internal regulator which supplies +12 volts for all of its circuitry. Everything else about this arrangement is fairly conventional, see accompanying photos. I experienced no undue hum pick-up on the CRT display, even though there is a fair amount of transformer fields present in the set-up. The display performs quite well on both of my spectrum analyzer displays, in spite of the limited bandwidth of the Vertical & Horizontal amplifiers. The noise display seen on the Vertical deflection is not as spiked as it would be through an amplifier with response to 100 khz or more, but on slow sweeps (one sweep /3 seconds), it looks quite sharp as far as the eye can discern. It is integrated more on the fast sweeps, which can be an advantage in some cases, smoothing the presentation of the fastest sweeps, which are about 20 HZ, Horizontal speed. The display can be made quite bright without blooming and the over all focus is excellent at all brightness levels.

This description is only meant to be a general guide for modifying existing TV or computer monitors. I tried to do it with a minimum of cost and construction effort. If one wanted extended V & H amplifier responses, all it would take would be a bit more time, and money. It primarily depends on the writing rates you will require on your X-Y monitor.

One word of caution, do not try to use the cheap, audio power amplifier IC type Op-amps available from many sources, which look like they could supply the required power, since they are single supply types, not designed for DC coupling to the yoke windings.

Note that the circuit diagram shows a z-axis input. It is AC coupled, which will suffice for many applications. Ideally it should be DC coupled, which could be accomplished without too much additional effort to provide return trace blanking for the horizontal deflection.

Finally, if I can be of assistance to anyone interested in going this route for their own X-Y displays, feel free to contact me.

Secondly, I would like to briefly mention another aspect of X-Y monitors. While there are many manufacturers of X-Y monitors, I am only familiar with the Tektronix Co. Just about everybody in the electronics field is familiar with their units. They made two models of X-Y displays, a model 611 & 614. I found two type 611's at Hamfests and I also use them for various X-Y applications. These are fairly exotic devices, in that they are memory scopes. They also have fairly high frequency response on the X, Y and Z axis, have excellent brightness and focus, etc. for photographic work, etc. If you can find one, it

would not require any modification, except for some external plugs, etc. They are all solid-state units, and you can do many tricks with them. If you already have a Tektronix, Hewlett-Packard or similar high quality 5 inch oscilloscope, you could do the following:

Feed the vertical amplifier output of this oscilloscope into the 611 x-axis input, the horizontal sweep output to the 611 y-axis input, and the horizontal blanking output to the z-axis input of the 611. You now have a fairly elegant memory scope system. The frequency response of all three axis will be better than 5 mhz.

It is the cheapest way I know to lash-up your own memory scope, using an existing scope and the 611 or 614 for the readout, with memory/trace retention, etc. Please refer to the schematics and data sheets that follow for further details. Have fun.

Don Morar - W3QVZ
P.O. 129
Great Cacapon, WV 25422

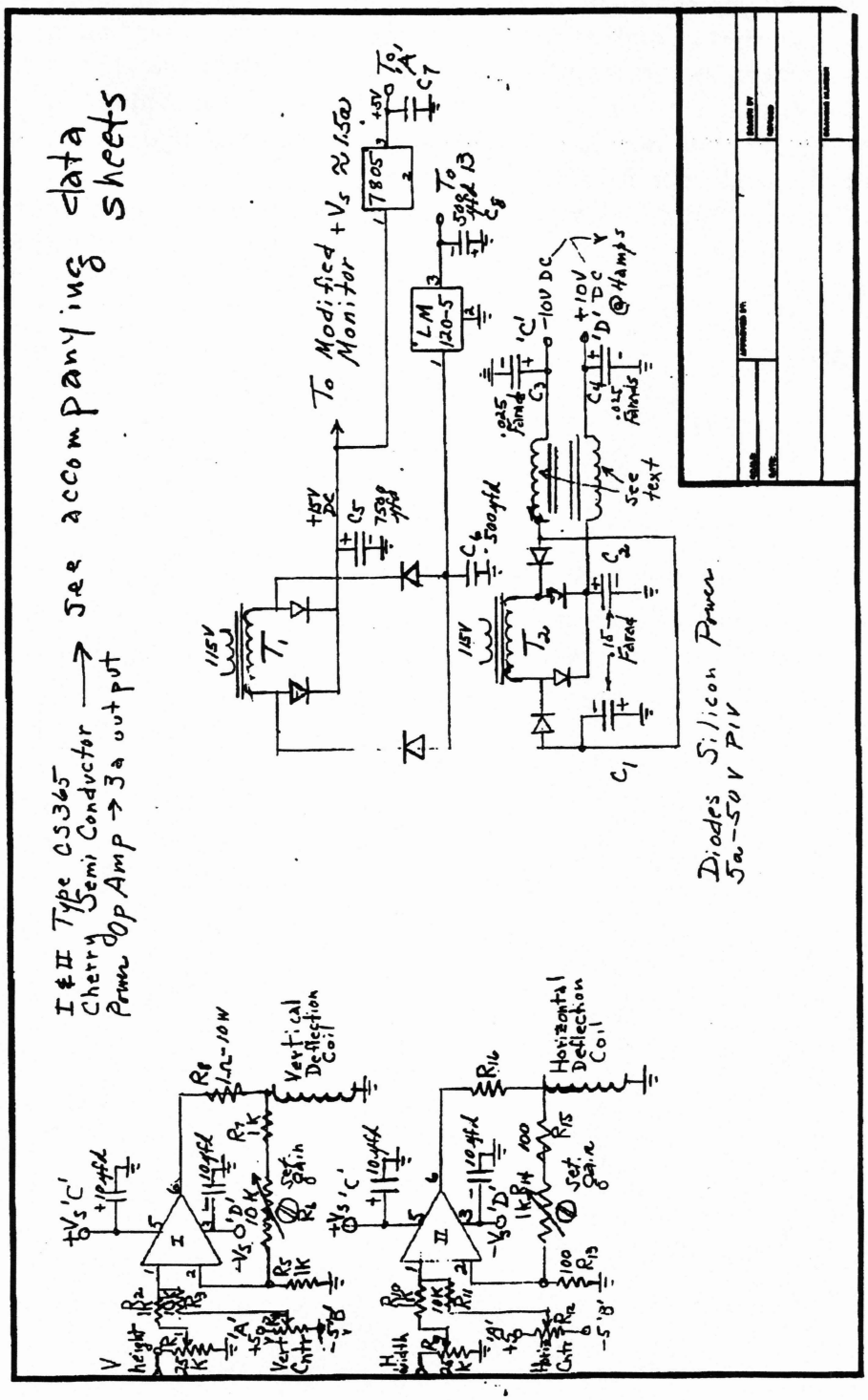
I & II Type CS365
Cherry Semi Conductor → See accompanying data sheets
Power Op Amp → 3a output
To Modified Monitor +Vs ≈ 1.5a
7805
LM 120-5
Diodes Silicon Power 5a-50V PIV
Vertical Deflection Coil
Horizontal Deflection Coil
Set Gain
See text

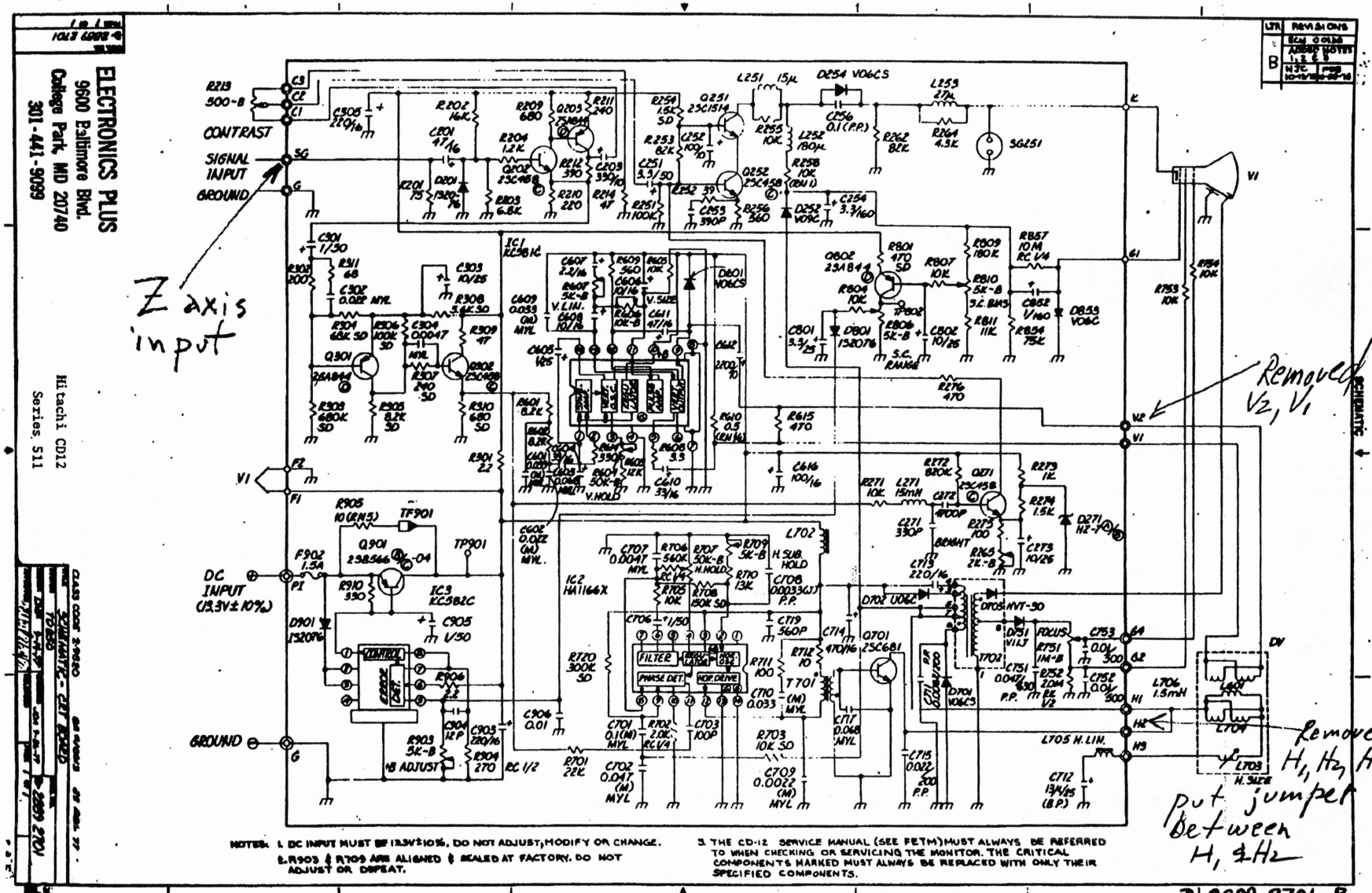

This video Monitor is fairley typical of a 'current' solid State type
All circuitry except Vertical sweep used.
Original 'H' circuitry free runs to supply 2nd anode for CRT

V_2-V_1 pair of Vert. Deflec Term.
H_1-H_3 " " Hor " "

3A POWER OPERATIONAL AMPLIFIER

DESCRIPTION

The CS-365 is a monolithic integrated circuit available in a T0-220 package. It is intended for use as a power operational amplifier in a wide range of applications, including servo amplifiers and power supplies. The high gain and high output power capabilities provide superior performance wherever an operational amplifier/power booster combination is required.

ABSOLUTE MAXIMUM RATINGS

Supply Voltage	±18	V
Upper power transistor V_{CE}	36	V
Lower power transistor V_{CE}	36	V
Input voltage	V_s	
Differential input voltage	±15	V
Peak output current	3.5	A
Power dissipation at T_{case} = 90°C	20	W
Storage and junction temperature	-40 to 150	°C

THERMAL DATA

$R_{th\ j\text{-}case}$ Thermal resistance junction-case	max	3	°C/W

BLOCK DIAGRAM

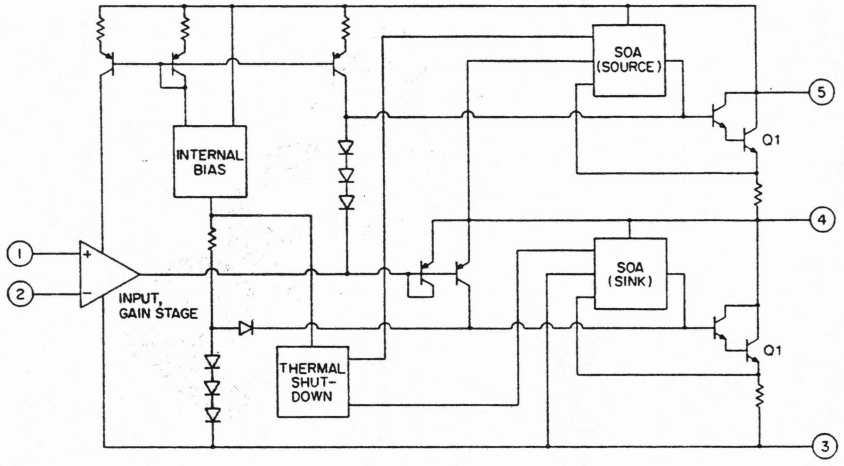

FEATURES:

- Output current up to 3A
- Large common-mode and differential mode ranges
- SOA protection
- Thermal protection
- ±18V supply

PIN CONNECTIONS

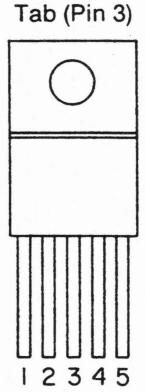

1. NON INVERTING INPUT
2. INVERTING INPUT
3. $-V_S$
4. OUTPUT
5. $+V_S$

Cherry Semiconductor Corporation, 2000 South County Trail, East Greenwich, Rhode Island 02818
Tel: (401)885-3600 Telefax (401)885-5786 Telex WUI 6817157

DON MORAR USER FEEDBACK

P.O. Box 129
Great Capacon, WV 25422
November 5, 1991

Science Workshop
Box 310
Bethpage, NY 11714

Dear Murray:

Long time no hear, hope everything is going well with you. Find the enclosed material, with some brief explanations. I had intended to write sooner, but you know how that goes.

Schematic I

This is the basic block diagram of your Spectrum Analyzer system with the addition of an 'integrator' arrangement that I use for radio astronomy purposes, plus the indicated 12" X-Y monitor, (converted video monitor), I previously sent you the material on same.

Schematic II

This is the schematic of the whole system. I know it's too crowded, but it is readable with a bit of patience. I refer to this as SA1.

Schematic III & IV

This is a block diagram of a spectrum analyzer that I started designing and building about 15 years ago, and finally finished about 2 years ago, after I retired. It has some variations on the theme of your system, which you can see in schematic IV. I refer to this system as SA2. In SA2 I use a Textronix Mod. 611 X-Y scope as my monitor, which I have previously mentioned in the material I sent to you on X-Y monitors.

Schematic V

This is a basic way of interfacing the 611 to a spectrum analyzer system.

Schematic VI

This is another copy of the original material I sent to you in the X-Y monitor conversion.

Schematic VII

This is a block diagram of a digitally controlled ramp generator that I designed about 11 years ago, when working at the University of MD., which was the last job I had before retiring in 1983. It worked quite well, and is for producing extremely/super slow sweeps for those who might desire same.

Schematic VIII

This is the schematic of the super slow sweep/ramp generator, which by the way is super linear since it actually consists of very small digital steps, which look like a smooth ramp on the scope unless you look close with an expanded sweep, etc. This system can be set up to provide 1 ramp per day, week, etc. and is totally amenable to TTL computer control, etc.

If you want any additional information on any of the above, feel free to contact me at any time. As I have already probably overwhelmed you with data, I will cease so that you can rest your eyes, hi.

I look forward to your book, and will keep you informed from time to time as to my activities here.

Regards,
Don Morar, W3QVZ

I

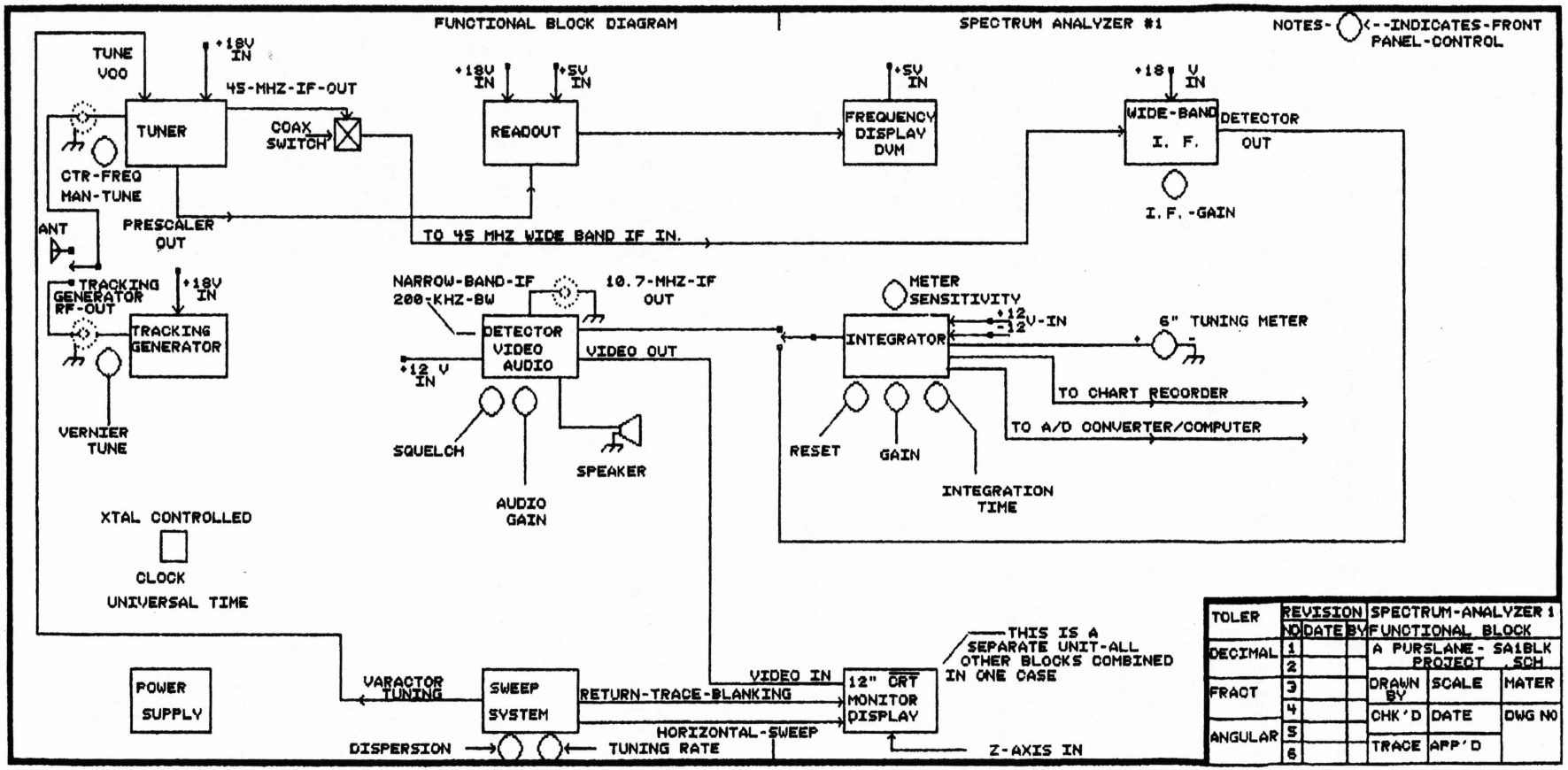
FUNCTIONAL BLOCK DIAGRAM
SPECTRUM ANALYZER #1
NOTES- ◯ <--INDICATES-FRONT PANEL-CONTROL
TUNE V00
+18V IN
45-MHZ-IF-OUT
TUNER
COAX SWITCH
CTR-FREQ
MAN-TUNE
ANT
PRESCALER OUT
+18V IN
+5V IN
READOUT
FREQUENCY DISPLAY DVM
+5V IN
+18 V IN
WIDE-BAND I. F.
DETECTOR OUT
I. F. -GAIN
TO 45 MHZ WIDE BAND IF IN.
TRACKING GENERATOR RF-OUT
+18V IN
TRACKING GENERATOR
VERNIER TUNE
NARROW-BAND-IF 200-KHZ-BW
10.7-MHZ-IF OUT
DETECTOR VIDEO AUDIO
+12 V IN
VIDEO OUT
SQUELCH
AUDIO GAIN
SPEAKER
METER SENSITIVITY
INTEGRATOR
+12 -12 V-IN
6" TUNING METER
TO CHART RECORDER
TO A/D CONVERTER/COMPUTER
RESET
GAIN
INTEGRATION TIME
XTAL CONTROLLED
CLOCK
UNIVERSAL TIME
POWER SUPPLY
VARACTOR TUNING
SWEEP SYSTEM
RETURN-TRACE-BLANKING
HORIZONTAL-SWEEP
DISPERSION
TUNING RATE
VIDEO IN
12" CRT MONITOR DISPLAY
Z-AXIS IN
THIS IS A SEPARATE UNIT-ALL OTHER BLOCKS COMBINED IN ONE CASE
TOLER
DECIMAL
FRACT
ANGULAR
REVISION NO DATE BY
1
2
3
4
5
6
SPECTRUM-ANALYZER 1 FUNCTIONAL BLOCK
A PURSLANE- SA1BLK SCH
PROJECT
DRAWN BY
SCALE
MATER
CHK'D
DATE
DWG NO
TRACE
APP'D

II

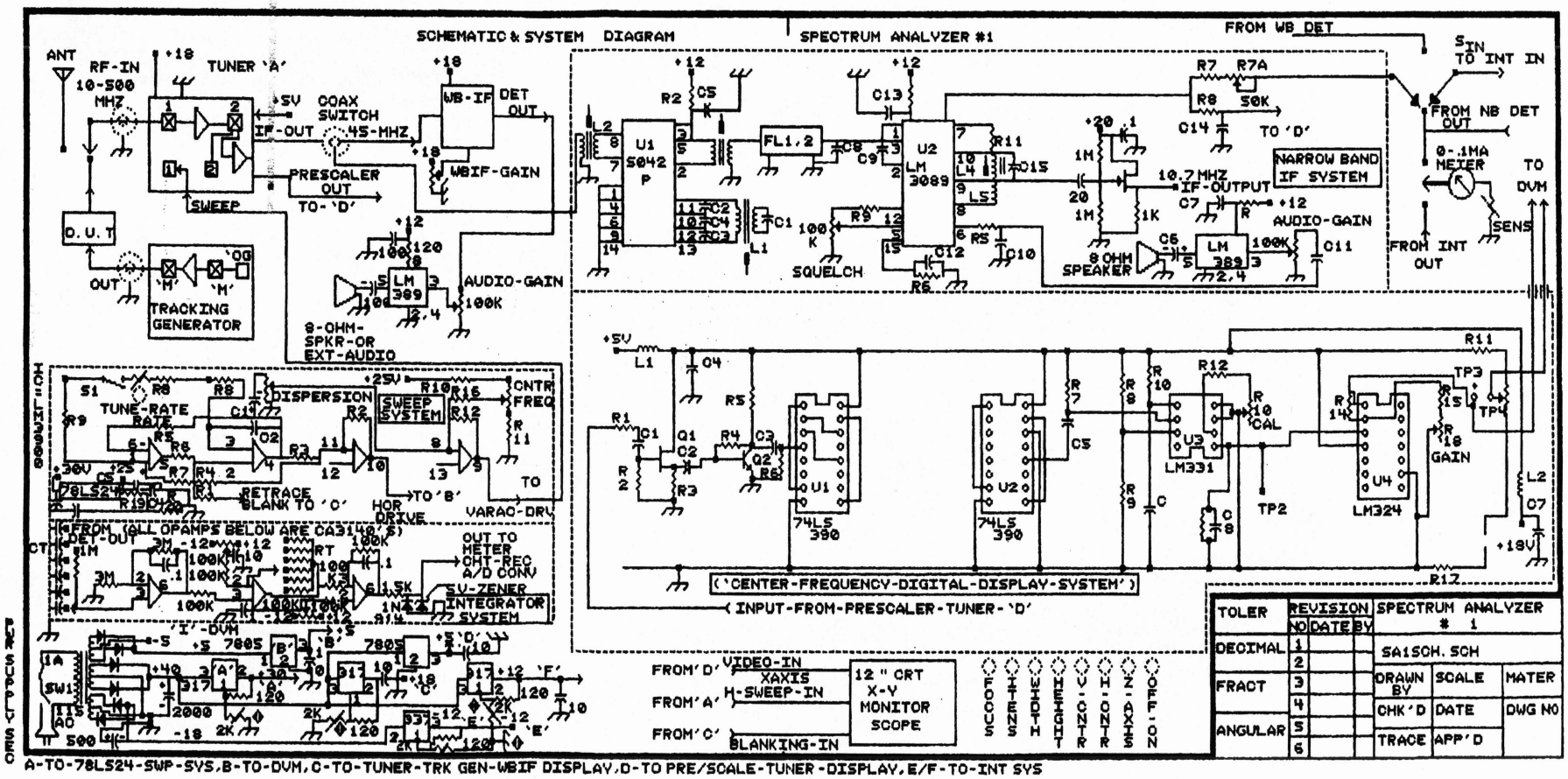
SCHEMATIC & SYSTEM DIAGRAM
SPECTRUM ANALYZER #1
FROM WB DET
TO INT IN
FROM NB DET OUT
0-.1MA METER
TO DVM
SENS
FROM INT OUT
ANT
RF-IN 10-500 MHZ
TUNER 'A'
COAX SWITCH
IF-OUT
45-MHZ
WB-IF
DET OUT
WBIF-GAIN
PRESCALER OUT
TO-'D'
SWEEP
D.U.T
OUT
TRACKING GENERATOR
8-OHM-SPKR-OR EXT-AUDIO
AUDIO-GAIN
LM 389
U1 5042 P
FL1,2
U2 LM 3089
SQUELCH
NARROW BAND IF SYSTEM
10.7MHZ IF-OUTPUT
8 OHM SPEAKER
TO 'D'
TUNE-RATE
DISPERSION
SWEEP SYSTEM
CNTR FREQ
RETRACE BLANK TO 'C'
HOR DRIVE
TO 'B'
VARAC-DRV
FROM (ALL OPAMPS BELOW ARE CA3140'S)
OUT TO METER CHT-REC A/D CONV
5V-ZENER INTEGRATOR SYSTEM
'I'-DVM
PWR SUPPLY SEC
74LS 390
LM331
LM324
CAL
GAIN
TP2
TP3
TP4
('CENTER-FREQUENCY-DIGITAL-DISPLAY-SYSTEM')
INPUT-FROM-PRESCALER-TUNER-'D'
FROM 'D' VIDEO-IN
XAXIS
FROM 'A' H-SWEEP-IN
FROM 'C' BLANKING-IN
12" CRT X-Y MONITOR SCOPE
FOCUS
ITENS
WIDTH
HEIGHT
V-CNTR
H-CNTR
Z-AXIS
OFF-ON
TOLER
REVISION
NO DATE BY
SPECTRUM ANALYZER # 1
DECIMAL
FRACT
ANGULAR
SA1SCH.SCH
DRAWN BY
SCALE
MATER
CHK'D
DATE
DWG NO
TRACE
APP'D
A-TO-78LS24-SWP-SYS,B-TO-DVM,C-TO-TUNER-TRK GEN-WBIF DISPLAY,D-TO PRE/SCALE-TUNER-DISPLAY,E/F-TO-INT SYS

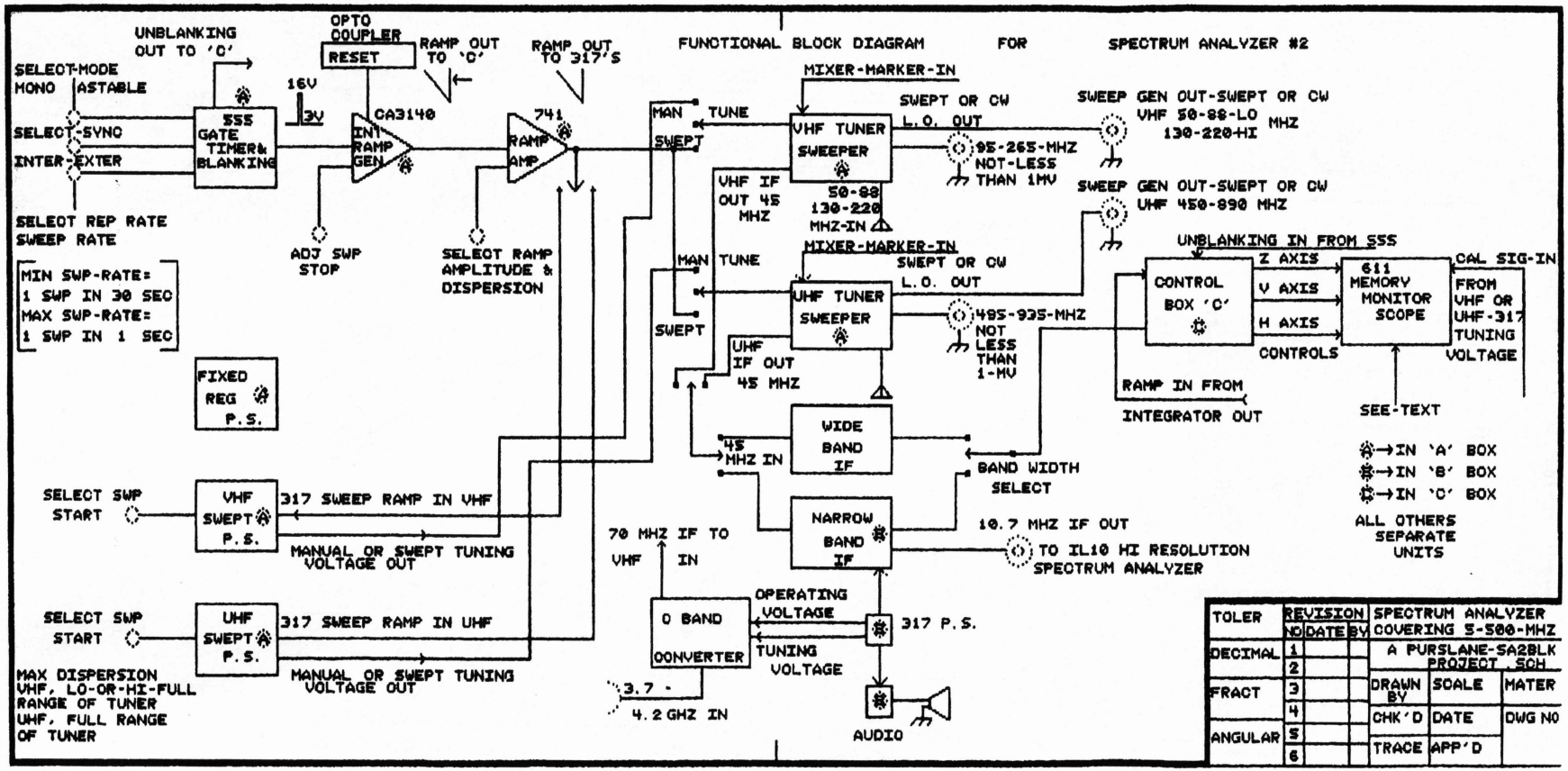
FUNCTIONAL BLOCK DIAGRAM FOR SPECTRUM ANALYZER #2
UNBLANKING OUT TO 'C'
OPTO COUPLER RESET
RAMP OUT TO 'C'
RAMP OUT TO 317'S
SELECT-MODE MONO ASTABLE
SELECT-SYNC
INTER-EXTER
SELECT REP RATE SWEEP RATE
555 GATE TIMER & BLANKING
16V
-3V
CA3140 INT RAMP GEN
741 RAMP AMP
ADJ SWP STOP
SELECT RAMP AMPLITUDE & DISPERSION
MIN SWP-RATE: 1 SWP IN 30 SEC
MAX SWP-RATE: 1 SWP IN 1 SEC
FIXED REG P.S.
MAN TUNE
SWEPT
MIXER-MARKER-IN
VHF TUNER SWEEPER
SWEPT OR CW L.O. OUT
95-265-MHZ NOT-LESS THAN 1MV
50-88 130-220 MHZ-IN
VHF IF OUT 45 MHZ
SWEEP GEN OUT-SWEPT OR CW VHF 50-88-LO MHZ 130-220-HI
SWEEP GEN OUT-SWEPT OR CW UHF 450-890 MHZ
UNBLANKING IN FROM 555
MIXER-MARKER-IN
UHF TUNER SWEEPER
SWEPT OR CW L.O. OUT
485-935-MHZ NOT LESS THAN 1-MV
UHF IF OUT 45 MHZ
CONTROL BOX 'C'
Z AXIS
V AXIS
H AXIS
CONTROLS
611 MEMORY MONITOR SCOPE
CAL SIG-IN
FROM VHF OR UHF-317 TUNING VOLTAGE
SEE-TEXT
RAMP IN FROM INTEGRATOR OUT
WIDE BAND IF
45 MHZ IN
BAND WIDTH SELECT
NARROW BAND IF
10.7 MHZ IF OUT
TO IL10 HI RESOLUTION SPECTRUM ANALYZER
⊛→IN 'A' BOX
⊛→IN 'B' BOX
⊛→IN 'C' BOX
ALL OTHERS SEPARATE UNITS
SELECT SWP START
VHF SWEPT P.S.
317 SWEEP RAMP IN VHF
MANUAL OR SWEPT TUNING VOLTAGE OUT
70 MHZ IF TO VHF IN
O BAND CONVERTER
OPERATING VOLTAGE
TUNING VOLTAGE
317 P.S.
SELECT SWP START
UHF SWEPT P.S.
317 SWEEP RAMP IN UHF
MANUAL OR SWEPT TUNING VOLTAGE OUT
MAX DISPERSION VHF, LO-OR-HI-FULL RANGE OF TUNER UHF, FULL RANGE OF TUNER
3.7 - 4.2 GHZ IN
AUDIO
TOLER
DECIMAL
FRACT
ANGULAR
REVISION NO DATE BY
SPECTRUM ANALYZER COVERING 5-500-MHZ
A PURSLANE-SA2BLK PROJECT .SCH
DRAWN BY
SCALE
MATER
CHK'D
DATE
DWG NO
TRACE
APP'D

IV

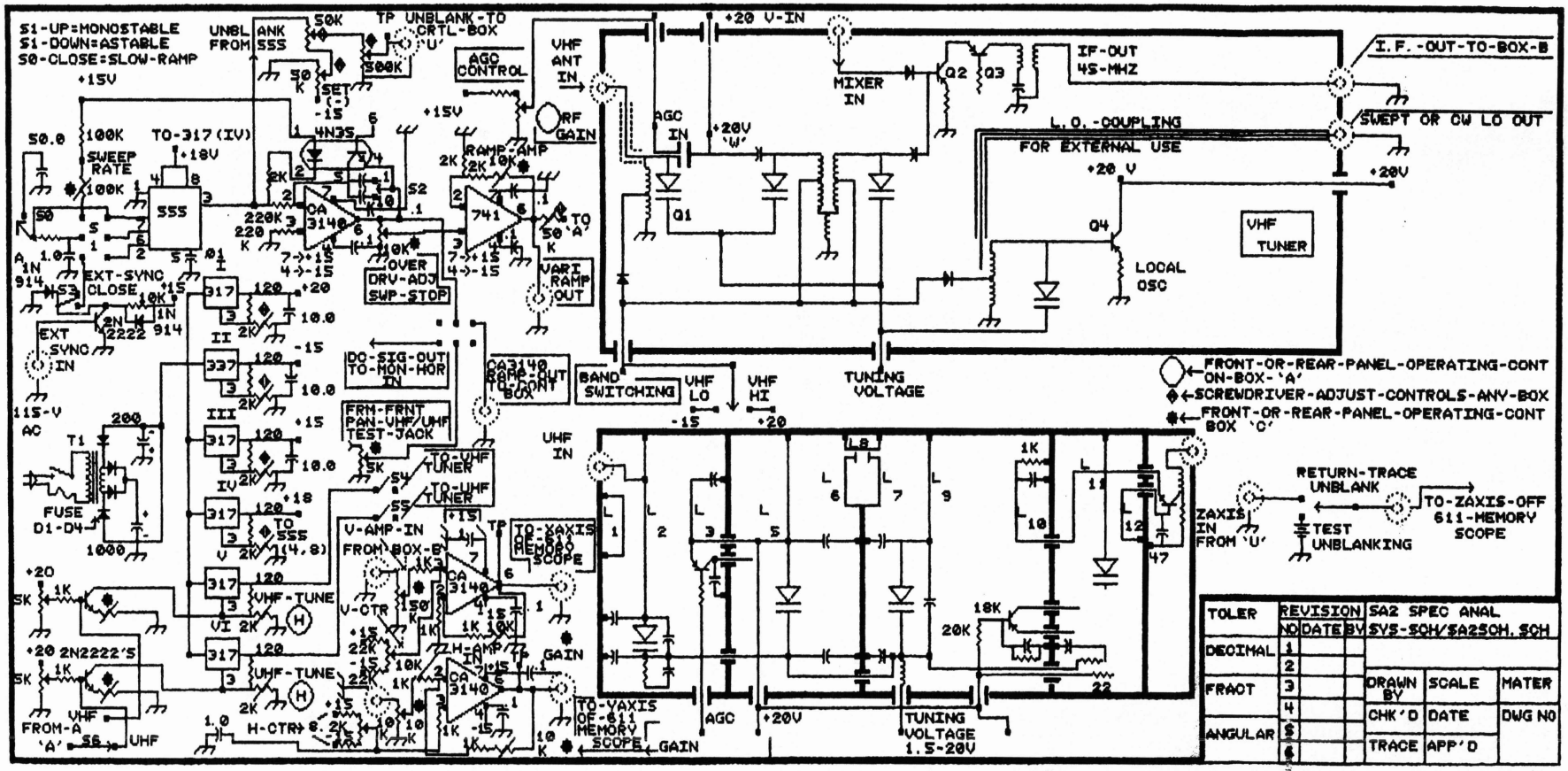
S1-UP=MONOSTABLE
S1-DOWN=ASTABLE
S0-CLOSE=SLOW-RAMP
UNBLANK FROM 555
TP UNBLANK-TO CRTL-BOX 'U'
AGC CONTROL
VHF ANT IN
RF GAIN
+20 V-IN
MIXER IN
IF-OUT 45-MHZ
I.F.-OUT-TO-BOX-B
SWEPT OR CW LO OUT
L.O.-COUPLING FOR EXTERNAL USE
+20 V
+20V
VHF TUNER
LOCAL OSC
AGC IN
+20V 'W'
Q1
Q2
Q3
Q4
TO-317 (IV)
SWEEP RATE
555
CA 3140
741
RAMP-AMP
OVER DRV-ADJ SWP-STOP
VARI RAMP OUT
EXT-SYNC CLOSE
EXT SYNC IN
115-V AC
DC-SIG-OUT TO-MON-HOR IN
CA3140 RAMP-OUT TO-CONT BOX
BAND SWITCHING
VHF LO
VHF HI
TUNING VOLTAGE
FRONT-OR-REAR-PANEL-OPERATING-CONT ON-BOX-'A'
SCREWDRIVER-ADJUST-CONTROLS-ANY-BOX
FRONT-OR-REAR-PANEL-OPERATING-CONT BOX 'C'
FRM-FRNT PAN-VHF/UHF TEST-JACK
TO-VHF TUNER
TO-UHF TUNER
FUSE D1-D4
V-AMP-IN FROM BOX-B
TO-XAXIS OF-611 MEMORY SCOPE
UHF IN
RETURN-TRACE UNBLANK
TO-ZAXIS-OFF 611-MEMORY SCOPE
ZAXIS IN FROM 'U'
TEST UNBLANKING
VHF-TUNE
UHF-TUNE
H-AMP IN
GAIN
TO-YAXIS OF-611 MEMORY SCOPE
FROM-A 'A'
H-CTR
TUNING VOLTAGE 1.5-20V
TOLER
REVISION
NO DATE BY
SA2 SPEC ANAL
SYS-SCH/SA2SCH.SCH
DECIMAL
FRACT
ANGULAR
DRAWN BY
SCALE
MATER
CHK'D
DATE
DWG NO
TRACE
APP'D

V

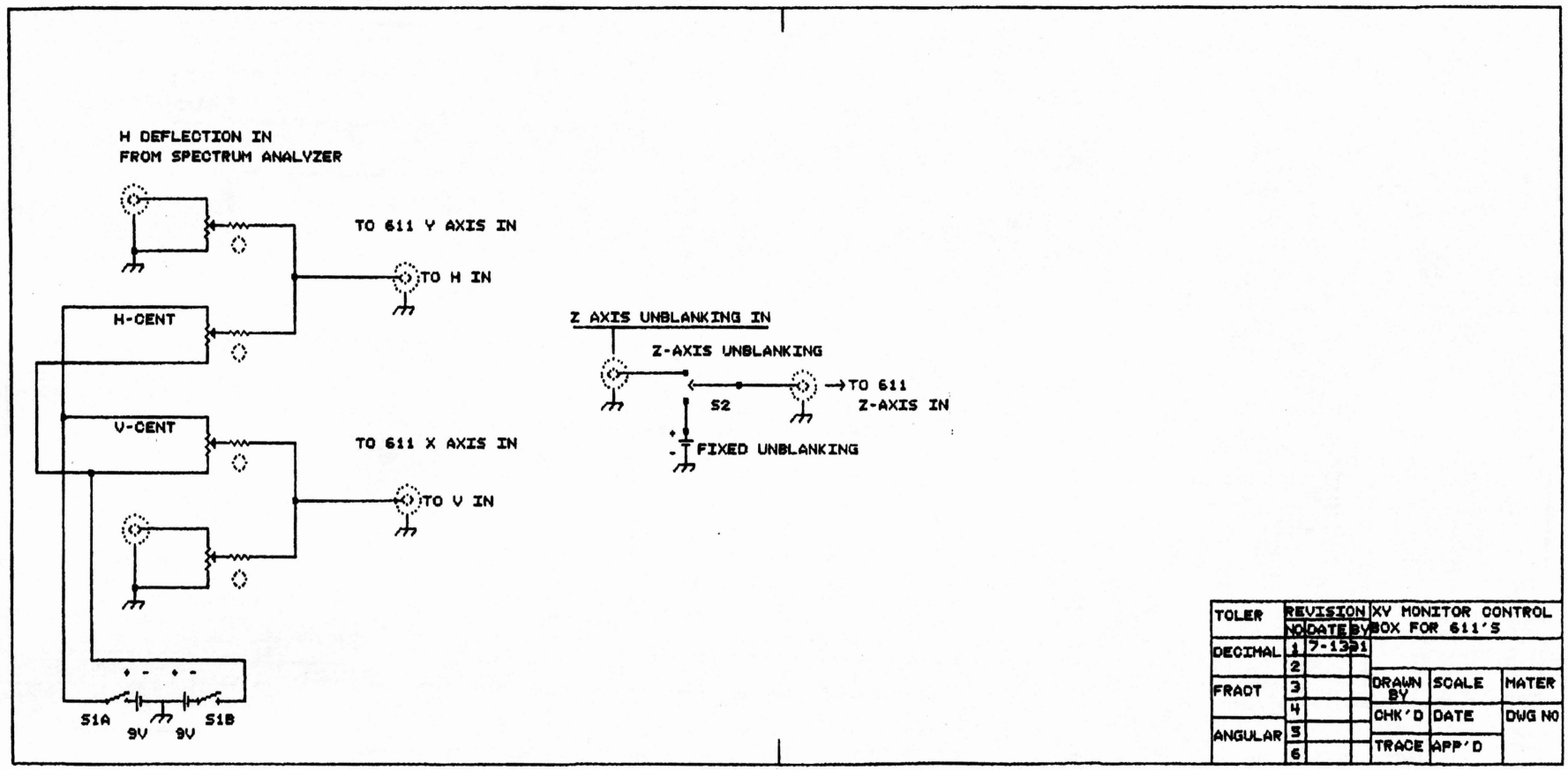
H DEFLECTION IN
FROM SPECTRUM ANALYZER
TO 611 Y AXIS IN
TO H IN
H-CENT
V-CENT
TO 611 X AXIS IN
TO V IN
S1A
9V
9V
S1B
Z AXIS UNBLANKING IN
Z-AXIS UNBLANKING
S2
TO 611
Z-AXIS IN
FIXED UNBLANKING
TOLER
DECIMAL
FRACT
ANGULAR
REVISION
NO DATE BY
1 7-13 S1
2
3
4
5
6
XV MONITOR CONTROL
BOX FOR 611'S
DRAWN BY
SCALE
MATER
CHK'D
DATE
DWG NO
TRACE
APP'D

VI

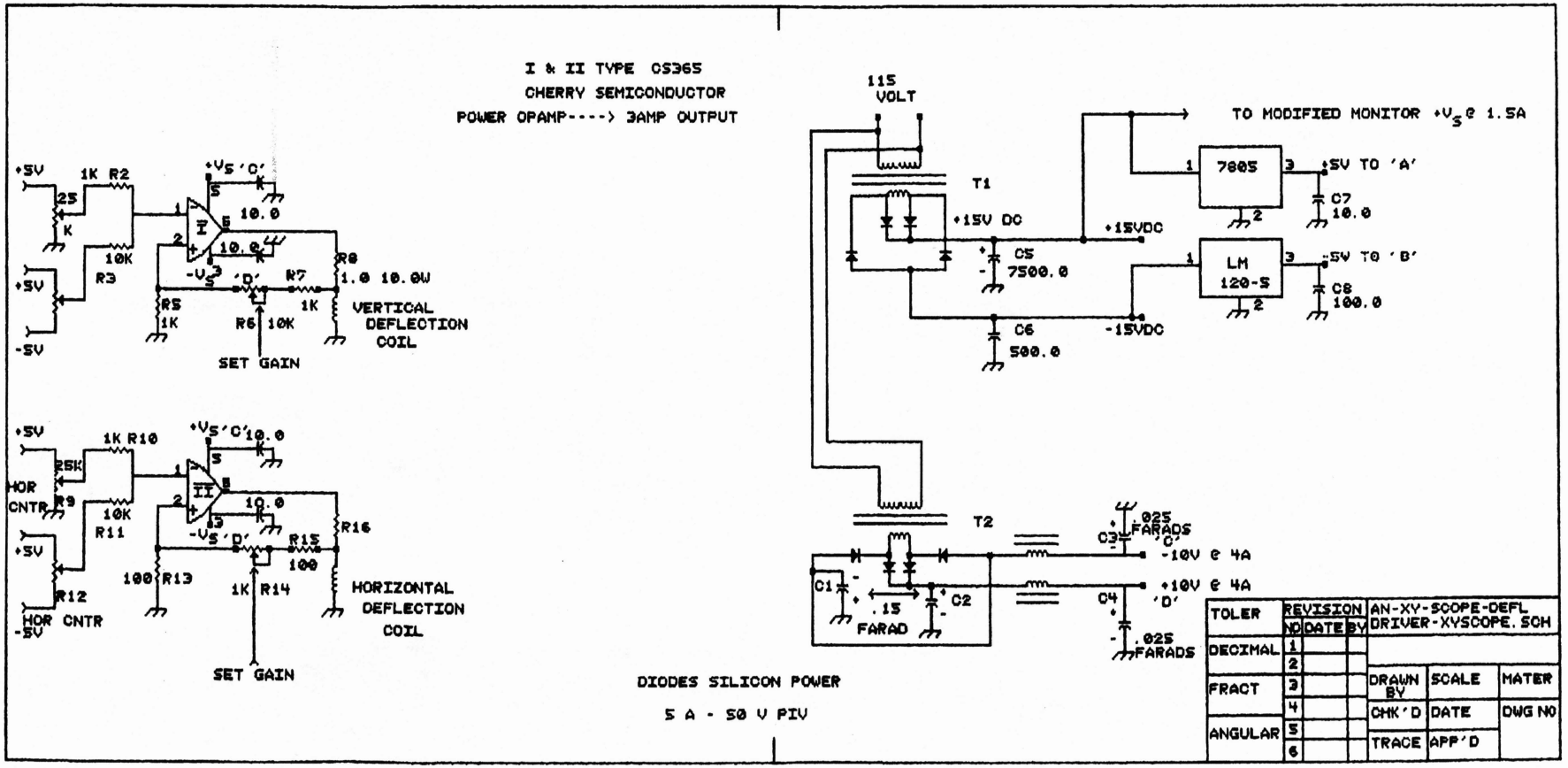
I & II TYPE OS365
CHERRY SEMICONDUCTOR
POWER OPAMP----> 3AMP OUTPUT
115 VOLT
TO MODIFIED MONITOR +Vs @ 1.5A
T1
+15V DC
+15VDC
-15VDC
C5 7500.0
C6 500.0
7805
LM 120-5
+5V TO 'A'
+5V TO 'B'
C7 10.0
C8 100.0
T2
C1 .15 FARAD
C2
C3 .025 FARADS
C4 .025 FARADS
-10V @ 4A
+10V @ 4A
+5V
1K R2
25K
10K R3
+Vs 'C'
10.0
-Vs 'D'
R5 1K
R6 10K
SET GAIN
R7 1K
R8 1.0 10.0W
VERTICAL DEFLECTION COIL
1K R10
25K
HOR CNTR
R9
10K R11
R12
HOR CNTR
-5V
100 R13
1K R14
R15 100
R16
HORIZONTAL DEFLECTION COIL
DIODES SILICON POWER
5 A - 50 V PIV
TOLER
DECIMAL
FRACT
ANGULAR
REVISION
NO DATE BY
AN-XV-SCOPE-DEFL DRIVER-XYSCOPE.SCH
DRAWN BY
SCALE
MATER
CHK'D
DATE
DWG NO
TRACE
APP'D

VII

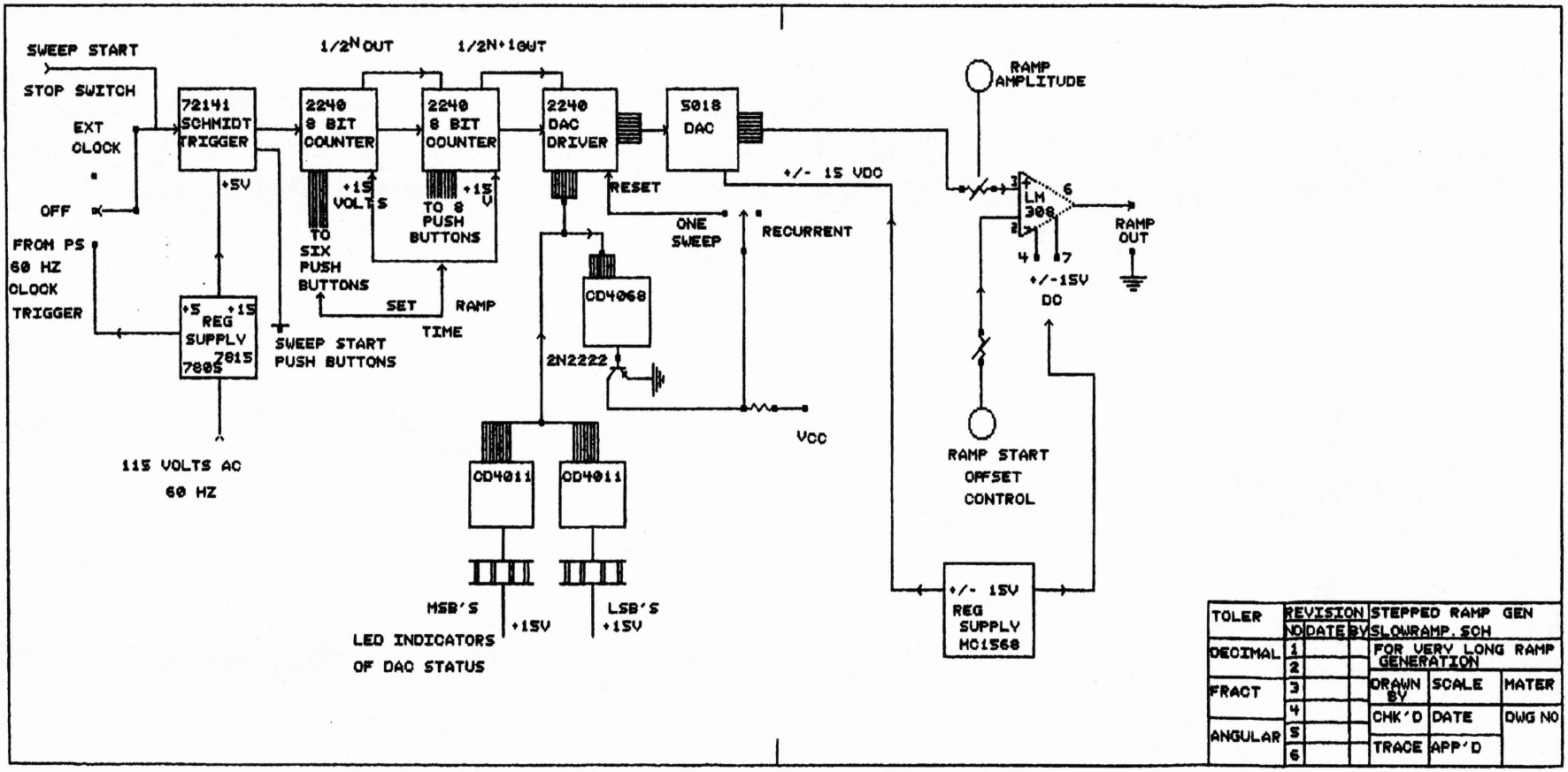

TOLER	REVISION NO	DATE	BY	STEPPED RAMP GEN SLOWRAMP.SCH		
DECIMAL	1			FOR VERY LONG RAMP GENERATION		
	2					
FRACT	3			DRAWN BY	SCALE	MATER
	4			CHK'D	DATE	DWG NO
ANGULAR	5			TRACE	APP'D	
	6					

VIII

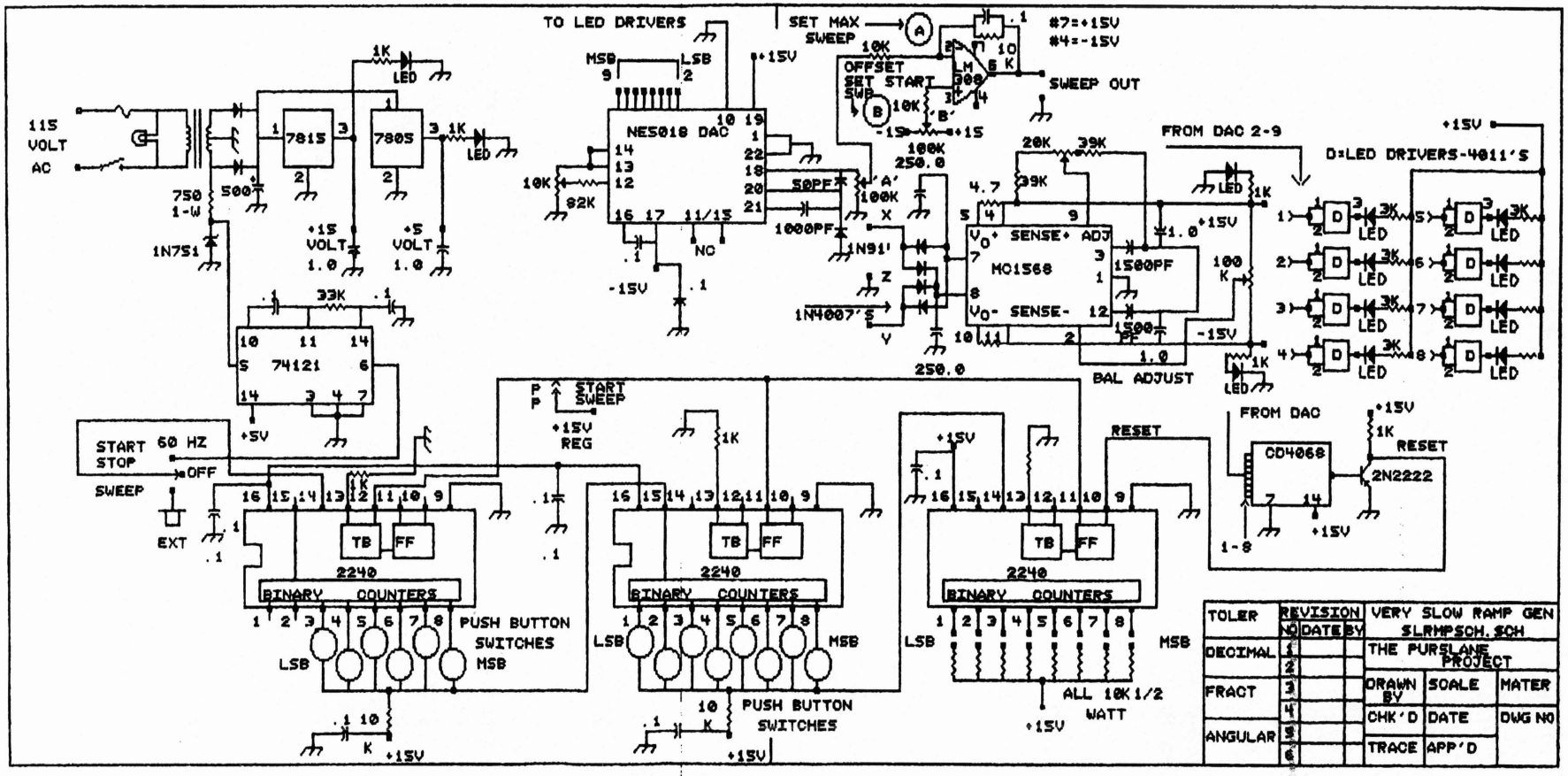
TO LED DRIVERS
SET MAX SWEEP
#7=+15V
#4=-15V
SWEEP OUT
OFFSET SET START SWB
115 VOLT AC
7815
7805
NE5018 DAC
MC1568
74121
FROM DAC 2-9
D=LED DRIVERS-4011'S
BAL ADJUST
START STOP
60 HZ
SWEEP
EXT
START SWEEP
+15V REG
FROM DAC
CD4068
2N2222
RESET
BINARY COUNTERS
PUSH BUTTON SWITCHES
ALL 10K 1/2 WATT
TOLER
DECIMAL
FRACT
ANGULAR
REVISION
NO DATE BY
VERY SLOW RAMP GEN
SLRMPSCH.SCH
THE PURSLANE PROJECT
DRAWN BY
SCALE
MATER
CHK'D
DATE
DWG NO
TRACE
APP'D

CHARLES KEMBRING USER FEEDBACK 1

Mr. Kembring describes his ideas on tuning and using the TRACKING GENERATOR.

June 10, 1987
Charles A. Kembring
R.D. 1, Box 187C
Highpoint Road
Cochranville, PA 19330

Murray Barlowe WA2PZO
Science Workshop
p.o. Box 310
Bethpage, New York 11714

SUBJECT: Tracking Generator Report

Dear Murray,

Just a follow-up note to our phone conversation of Thursday, June 4th to pass along my progress.

You were correct by suggesting the retuning of L1 to get proper operation of the variable tuning addition for the tracking generator - all is well.

I had some problems in tuning and I thought I'd pass along my findings; it may help others.

I found the tuning of L1 and L5 to be very broad. L1 moved the "Pips" across the screen, and I detected no large change in amplitude. L5 seemed to have a small peak where I did notice a slight increase of amplitude.

I tuned LI, using a signal generator as a source, and with the Potentiometer to adjust the varactor diode set at mid range. The "Analyze/Monitor" switch was set on Monitor and I peaked L1 using the signal strength meter with very nice response. I flipped to the Analyze mode and checked the response of the tracking adjust pot and, with slight peaking of L1 (control on center of rotation), I was able to have a condition where the "Pip" was able to be shifted approximately 1 1/2" from center equally to both directions.

After adjusting the coils on the main board, I found higher sensitivity and good response.

I connected the tracking generator output to the SW-5800 input with the tracking adjust pot in the center of rotation and

re-peaked L1 again. Then I checked with the center frequency control and the tracking across the band was very good.

I haven't tried to install the filter kit which I purchased from you yet; I wanted to get this tracking generator installed and any bugs worked out first.

The audio mod was a good improvement to the project - I find the Broadcast Band Reception to have fairly good quality!

I used a 2.5K pot across the 20 Volt ramp board power supply to control the varactor diode. I used no additional resistance and found the control of the oscillator to be okay.

I'm using a 5" CRT, and I can move the trace about 1 1/2" from center in either direction with the width control set at 8 o'clock - approximately 10 to 15 KHZ/Div. I'II have to fool with it a bit to see if my method creates a problem. Also, the tracking control makes a dandy "fine tuner" for the analyzer.

I think that I'm going to install an On-Off switch on the tracking generator B+ line because I see some signals caused by the generator being on line, but not connected for use. Both tuner assemblies are stacked on top of each other - maybe some additional shielding is required.

I've looked at a band pass and a notch filter with the tracking generator/analyzer and I'm very impressed with the results.

Keep me on your mailing list.

Respectfully,

Charles A. Kembring

JERRY LEFEBVRE USER FEEDBACK

Jerry (W1SEP) takes me to task for not providing an overall schematic and wiring diagram for the "complete" Poor Man's Spectrum Analyzer, and rightly so. My defense (a poor one I guess) has been that this project hasn't stood still long enough over the years to nail it down. What with new "bells & whistles" or changes in major components that are no longer available (such as tuners, etc.), and the fact that many of our kits are sold with different options.....providing an overall schematic and wiring diagram that would be useable for everyone, reminds me of the title of a book I read... "Nailing Jelly to a Tree".

However, Jerry puts me to shame by doing the "impossible". After much frustration he has drawn up his version of the Poor Man's Spectrum Analyzer, incorporating some of the suggestions I've talked about but never documented, plus some of his own. After seeing what he has accomplished, I now know why I've been procrastinating so long!

JERRY LEFEBVRE W1SEP
61 Highland Avenue
Tewksbury, MA 01876
508-453-5420

Dear Sir:

I am having a few problems following your schematic--all blured, it doesn't make it easy to follow. I have built unit on a couple of chassis and each time, it was too small to accomodate all the add on's. I am enclosong a print of the units all combined together.... if I have any errors. I am enclosing two prints, one for yourself and one to be returned with all the corrections.

On the other side of my diagram, I have a face plate , what it will look like (Front Panel) where the dotted lines are, I took a copper clad board, mounted the PC Boards with shields, except SW6007. Under this plate, I mounted SW5800 +SW5810+SW5900, so I can slide it out in case I want to trouble shoot it.

PS. I like this unit and will use it in my work. I have worked with these units at work--some cost $45,000. Not peanuts-----Thank you.

JERRY LEFEBVRE W1SEP

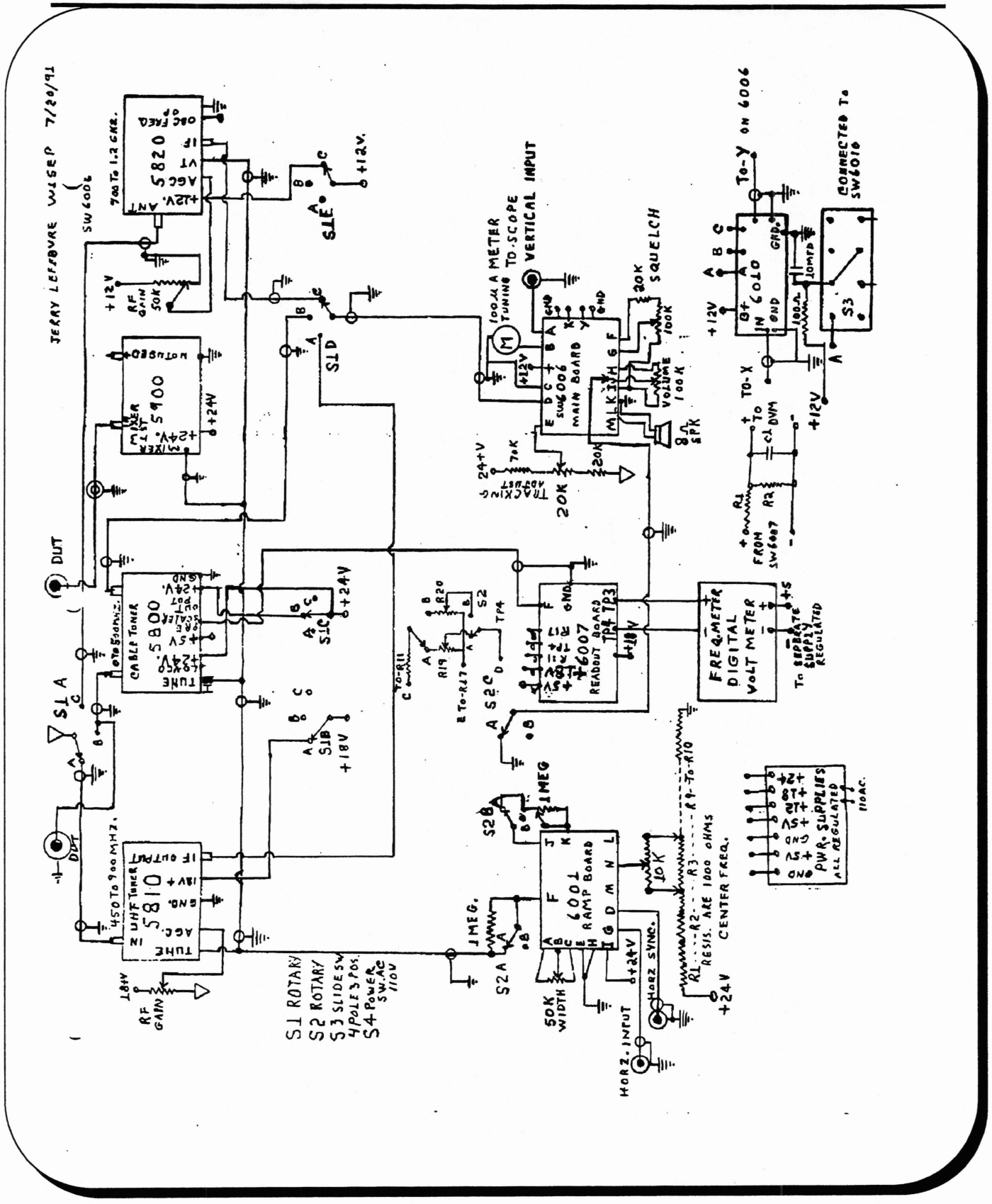

Jerry's interconnect diagram.

JERRY LEFEBVRE USER FEEDBACK

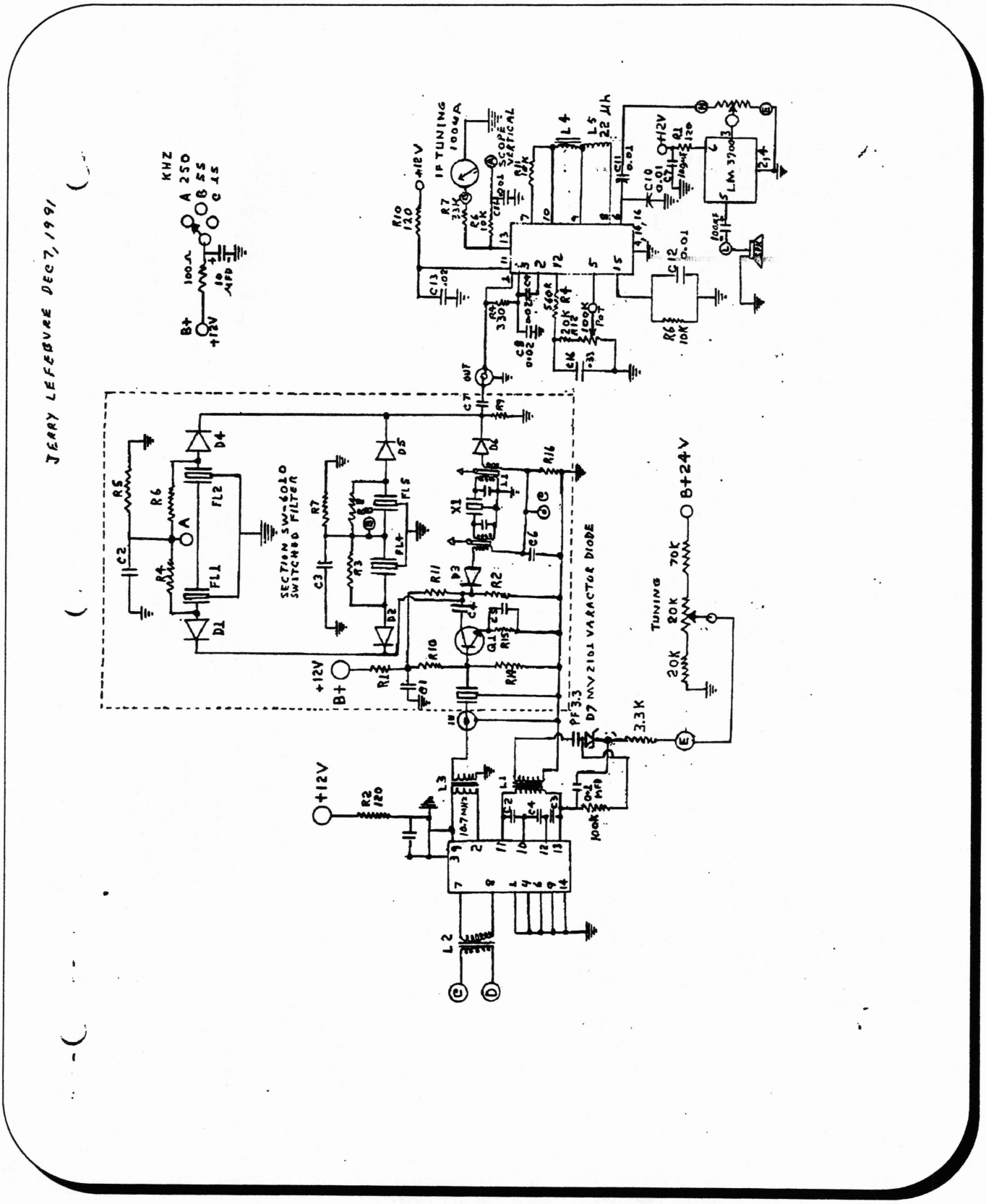

Main Board with Switched Filter upgrade.

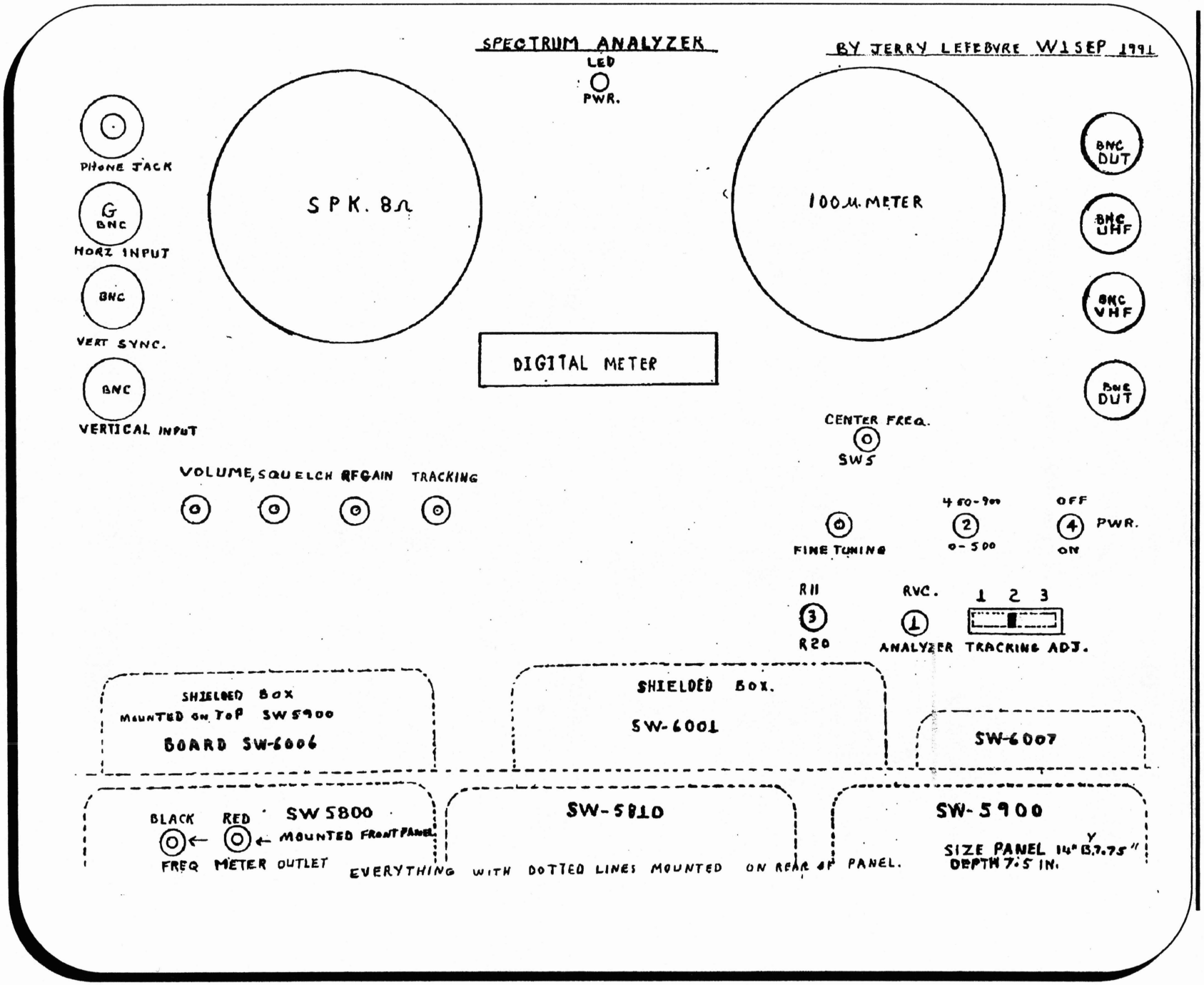

Front Panel Layout.

TERRY GOOD — USER FEEDBACK

Terry uses a noise bridge with his "Poor Man's Spectrum Analyzer" to make antenna measurements.

Science Workshop
PO Box 310
Bethpage, NY 11714

March 2, 1986

Dear Mr. Barlowe,

I was very fortunate, last year, to purchase your kit "RF VISION". It has given me many hours of pleasure, both during construction and in mutual use. Although I must admit the construction and subsequent modifications have provided the greatest enjoyment.

I originally began using the product for listening to signals and just seeing what was on the band. A two meter beam provided adequate input signals, and with a little practice it was possible to identify repeaters when they appeared.

My real interest was in using your product as a spectrum analyzer. It has done this remarkably well. It does have obvious limitations in bandwidth resolution and amplitude linearity, but considering the price range, this is understandable, Another drawback is the use of a tuner which requires 3 bands to cover 50-900 Mhz, with two very large holes, and no coverage below 50 Mhz. (*This was before we added the current tuners.)* I have added a mixer and local oscillator (110 Mhz) which allow continuous coverage of 3-85 Mhz using the VHF hi-band. It would be nice to have an analyzer to cover 1-300 Mhz continuous, and allow a readout of the center frequency. *(Now available)*.

Another area of interest to me is antenna measurements. I have used a Polamar Noise Bridge for several years, and with the help of a computer I have been able to calculate some good data on my antennas. The final data being converted manually from tabular form to graphs. It occurred to me to use your product as the detector in place of the normal receiver. You can well imagine my excitement in seeing my antenna graphs appear on the CRT without any laborious data gathering or calculating ! Now I'm looking for a flat noise source for 1-30 Mhz. Would you know of such a device ?

I am so pleased with this project that I have recommended it to several friends and plan to demonstrate it at a club meeting in the near future. One friend who has shared my enthusiasm from

the beginning is Bill Good W2CVI, who is also my uncle. We have exchanged many ideas and lots of encouragement as this project has evolved. It is often the only topic of our weekly schedule. It is hard to believe an electronic tool could generate so much pleasure, but this one did. THANK YOU!!!
Thanks again for Many hours of pleasure.

Terry Good
WB2PFB
3 Bergen Ave
Hillsdale, NJ 07642

I just couldn't let Terry slip away without telling us more about how we was using his analyzer to make antenna measurements, so I called him, and this was his response:

Science Workshop
PO Box 310
Bethpage, NY 11714
March 20, 1986

Dear Murray,

It was a pleasure to speak with you last week, I hoped to get this package out sooner, but it obviously didn't happen.

I have enclosed a program tape for the VIC-20, a listing of the same program in basic, a copy of the operator's Manual for the PALOMAR noise bridge, and a description of how I use them in my radio shack. As well as an outline of modifications to the "Poor Man's Spectrum Analyzer".

I constructed the product very much as outlined in your documentation. Minor modifications to operator controls were made, for ease of use. We can discuss these at a later date.

The main addition I made was to the front end. I installed a mixer and local oscillator at the VHF input, The mixer is a WATKINS-JOHNSON Model M1A, bandwidth 3-1000 Mhz. The local oscillator is a solid state VCO set to 110 Mhz. Both items are from my junk box. The TV tuner in the Analyzer is operating on the VHF HI band. This particular tuner works from 110-195 Mhz. When mixed with the LO, the input covers approximately 3-85 Mhz. I have noticed three spurs at 32.5, 54.4, and 79.5 Mhz. I am not sure of their source, but they are a minor nuisance, at present.

TERRY GOOD USER FEEDBACK

Procedure for using a PALOMAR noise bridge with the SCIENCE WORKSHOP "Poor Man's Spectrum Analyzer";

This procedure can be used to determine the approximate resonant frequency of an antenna. If a known frequency or band of frequencies can be marked on the CRT, then the antenna can be adjusted to resonance merely by observing the display.

1.) The antenna to be measured is connected to the "unknown" terminals of the noise bridge.
2.) The ANALYZER is connected to the "receiver" terminals.
3.) Set the R and X controls to mid-position.
4.) The display will appear very much like a VSWR curve.
5, The trace will show a dip if the antenna is resonant at any point within the bandwidth displayed.

6. Adjusting the R and X controls will affect the display, but mainly the amplitude and depth of the dip. They will not affect the frequency of resonance.

BASIC PROGRAM

Exact antenna measurements can be made using a calibrated receiver and the procedure in the PALOMAR manual. Data from these measurements is entered into the basic program, The program originally appeared in 73 Magazine. I modified it for my own convenience to work on a VIC-20 with 16K of memory. The listing is a tried and true version of the program. The data at the top of the listing is sample input and output data for testing the accuracy of the program. If you type the program in, or use it on a different computer, I would encourage you to use this data for testing. The data agrees with the sample in the original article.

NETWORK ANALYSIS

I consider the combination of a noise bridge and a spectrum analyzer to be a form of network analyzer. It does work, but it could be better. I would like to substitute a flat, wide band noise source and a return loss bridge (directional coupler) for the noise bridge. I'm very busy at work now, but I will pursue this idea when time permits.

Please feel free to write or call if you have questions.

Best regards,

Terry Good
WB2PFB
3 Bergen Ave
Hillsdale, NJ 07642

BASIC PROGRAM FOR VIC-20

```
FEEDLINE  Z            50
FEEDLINE  LENGTH       83.6961
VELCOCITY FACTOR      .69

FREQUENCY  (MHZ)       14.2
RESISTANCE DIAL        20
REACTANCE DIAL          0

ANTENNA RESISTANCE     124
ANTENNA REACTANCE        0
FEEDLINE VSWR           2.5
```

```
10   REM  NOISE BRIDGE DATA REDUCTION
20   REM  POLOMAR NOISE BRIDGE
30   REM  VIC-20 W/16K
40   REM  1978 N6RY
41   REM  MOD 1/84 WB2PFB
42   REM  MOD 4/85 WB2PFB
44   CLR:PRINT"{CLR}"
45   PRINT;"NOISE BRIDGE"
46   PRINT;"DATA REDUCTION"
50   PRINT;PRINT
52   PRINT"PRINTER YES=1"
54   INPUT Q
60   REM PRINTER IS 4
70   PRINT"FEEDLINE Z";
80   INPUT Z:Z.INT(Z)
90   PRINT"FEEDLINE LENGTH";
100  INPUT L
110  PRINT"VELOCITY FACTOR";
120  INPUT V
130  IF V>I THEN 70
135  IF Q=1 THEN GOSUB 5OO:REM     PRINTER
140  PRINT"FREQUENCY (MHZ)";
15O  INPUT F
160  IF F=0 THEN 1000
170  PRINT"RESISTANCE DIAL";
180  INPUT D
190  IF D=0 THEN D=0.0001
200  GOSUB 420
210  IF U>O THEN 240
220  PRINT"NEGATIVE RESISTANCE     !!"
230  GOTO 140
240  F=(-.00638372)*l*F/V
250  IF ABS(P)=#/2 THEN  P=P+O.OOO1
260  T=SIN(P)/COS(P)
270  B=Z*T+W
280  G=Z-W*T
290  H=U*T
```

(Continued)

```
300  M=Z*SQR((U#2+B#2)/(G#2+H#2))
310  A.ATN(B/U)-ATN(H/G)
320  IF G<O THEN A=A+#
330  R=M*COS(A):R=INT(R)
340  X=M*SIN(A):X=INT(X)
345  PRINT
350  PRINT"ANTENNA R = ";R


360  PRINT"ANTENNA X = ";X
370  K=SQR((R-Z)#2+X#)/((R+Z)#2+X#2))
380  IF K=1 THEN K=0.999999
390  S=(1+K)/(1-K):S=INT(S*10+.5)/10
400  PRINT"VSWR    = ";S
405  PRINT
407  IF Q=1    THEN GOSUB     6OO:REM   PRINTER
410  GOTO 140
420       REM SUBROUTINE FOR  POLOMAR   BRIDGE
430  U=D
440  PRINT"REACTANCE DIAL";
450  INPUT C
460  IF C>70 THEN C=140-C
470  IF C<-70 THEN C=C-139.999
480  W=2273.64/F*C/(C+70)
490  RETURN
500  REM PRINTER SUB 1
510  OPEN4,4
520  PRINT#4,"FEEDLINE Z ",Z
530  PRINT#4,"FEEDLINE LENGTH",L
540  PRINT#4,"VELOCITY   FACTOR",V
550  PRINT#4:PRINT#4
555  CLOSE 4
560  RETURN
600  REM PRINTER SUB 2
605  OPEN 4,4
610  PRINT#4,"FREQUENCY (MHZ)",F
620  PRINT#4,"RESISTANCE DIAL",D
630  PRINT#4,"REACTANCE DIAL ",C
635  PRINT#4
640  PRINT#4,"ANTENNA RESISTANCE   ";R
650  PRINT#4,"ANTENNA REACTANCE    ";X
660  PRINT#4,"FEEDLINE VSWR              ";S
670  PRINT#4:PRINT#4
675  CLOSE 4
680  RETURN
1000 END

READY.
```

Terry describes how he tunes antennas to another ham.

Don Winfield
K5DUT
6080 Anahuec Ave.
Fort Worth, TX 76114

July 25, 1987

Dear Don,

You cannot imagine my surprise (and pleasure) at receiving your letter. I'II bet you've been talking to Murray Barlowe at Science Workshop! No one ever asked me to explain what I was doing. I hope I can put it into words.

First let me say that I am not an expert, nor do I claim any special talents in antenna measurements. I'm a ham who likes to tinker, I tried something that interested me, and it worked. This procedure will allow you to display a graph of frequency vs antenna impedance, which will appear similar to a VSWR plot, with the lowest point being the resonance. I have made no attempt to measure gain.

The reason you have not seen any reference to using spectrum analyzers for antenna measurements is because these types of measurements are traditionally done with a NETWORK ANALYZER. By adding a noise bridge (a signal source and an RF bridge) to the input of the spectrum analyzer, we can transform the "POOR MAN'S SPECTRUM ANALYZER" into the "POOR MAN'S NETWORK ANALYZER".

The tests I did several years ago were rather crude, but illustrated the potential of what I had in mind. These tests were done at HF frequencies, my main area of interest. I had been using a PALOMAR Noise Bridge to measure my HF antenna's with considerable success, but with a great deal of labor. Even with the help of a computer program to normalize and reduce the data, many data points meant much data entry. I was looking for any easier way to tune an antenna to the point I wanted without doing all the calculations. A graphic representation seemed appealing, especially if the display had some kind of reference for frequency and amplitude.

In stepped "RF VISION" from Science Workshop. I had always wanted a good spectrum analyzer that I could afford. I've had the use of state of the art equipment at work, but nothing I could own and use whenever I wanted. While "The Poor Man's Spectrum Analyzer" is not a commercial grade spectrum analyzer, I think it

is state of the art for amateur applications. Enough sales pitch, you already know this, because you bought one!

The noise bridge needs a detector to indicate when the unknown (antenna) is at null (matched) to the bridge. Normally this is done with a receiver set to the frequency of interest. The laborious part comes when you want to measure your antenna at more than one frequency, like when you want to plot a graph of bandwidth vs impedance or VSWR. You must reset the receiver, null the bridge and record the readings for each frequency of interest. Boring.

By substituting the spectrum analyzer for the normal receiver, several benefits are immediately apparent. One, since the noise bridge is providing a signal at many frequencies simultaneously, and the spectrum analyzer is sweeping over a large range of frequencies, all frequencies within the bandwidth of the system are available at the same time. Two, the results are plotted on the CRT graphically, without any laborious calculations! And three, the relative tuning of the antenna is obvious at a glance!

So, with the use of a spectrum analyzer and a noise bridge, we can display graphically, the frequency response of an antenna, without the headaches of all those calculations. Of course, there are some considerations. The bandwidth of the system is limited to that of the noise bridge and the spectrum analyzer. Hopefully you will be making measurements within the range of the equipment. Since I am working in the HF region, I added a local oscillator and a mixer to the analyzer, to lower the range. If you have one of the newer analyzers which covers 0-400 Mhz, this will not be necessary. The range can be adjusted upward in a similar manner. The amplitude flatness is also limited by these two devices, neither of which is flat. I have found that the system is reasonably flat over the narrow bandwidth of interest, usually a few hundred kilohertz to a few megahertz. The system has no way to measure frequency or amplitude directly from the CRT. I use an external signal generator to calibrate several frequency and amplitude points on the CRT. Remember these are relative measurements. If you want finite values, it will probably still be necessary to use conventional, manual techniques, to gather the data. I usually do this so I have a record of my work. If you are careful to set up the system so that you know the bandwidth and amplitude displayed on the CRT, you will be able to make changes to the antenna and see the results instantaneously.

There is another way, but I have not had an opportunity to try it yet. Murray is developing a tracking generator, which would eliminate the noise source. The only piece missing is the RF bridge, but that circuit is available in the ARRL Handbook.

TERRY GOOD USER FEEDBACK

I hope I have given you some ideas for continuing your experiments, and I will answer any questions to the best of my ability. Keep an eye on Science Workshop, Murray has lots of good ideas.

Best regards,

Terry Good
WB2PFB
3 Bergen Ave.
Hillsdale, NJ 07642

COMB GENERATOR

Talmadge Huckabee, WB4KDY
P.O. Box 1231
Mathews, VA 23109

Dear Murray,

Enclosed is a drawing of a 10 MHz comb generator thai I added to my Spectrum Analyzer. It will produce markers every 10 MHz past 500 MHz.

Also, I am working on a new tuner in the range of 100 KHz to 100 MHz, using a NE602.

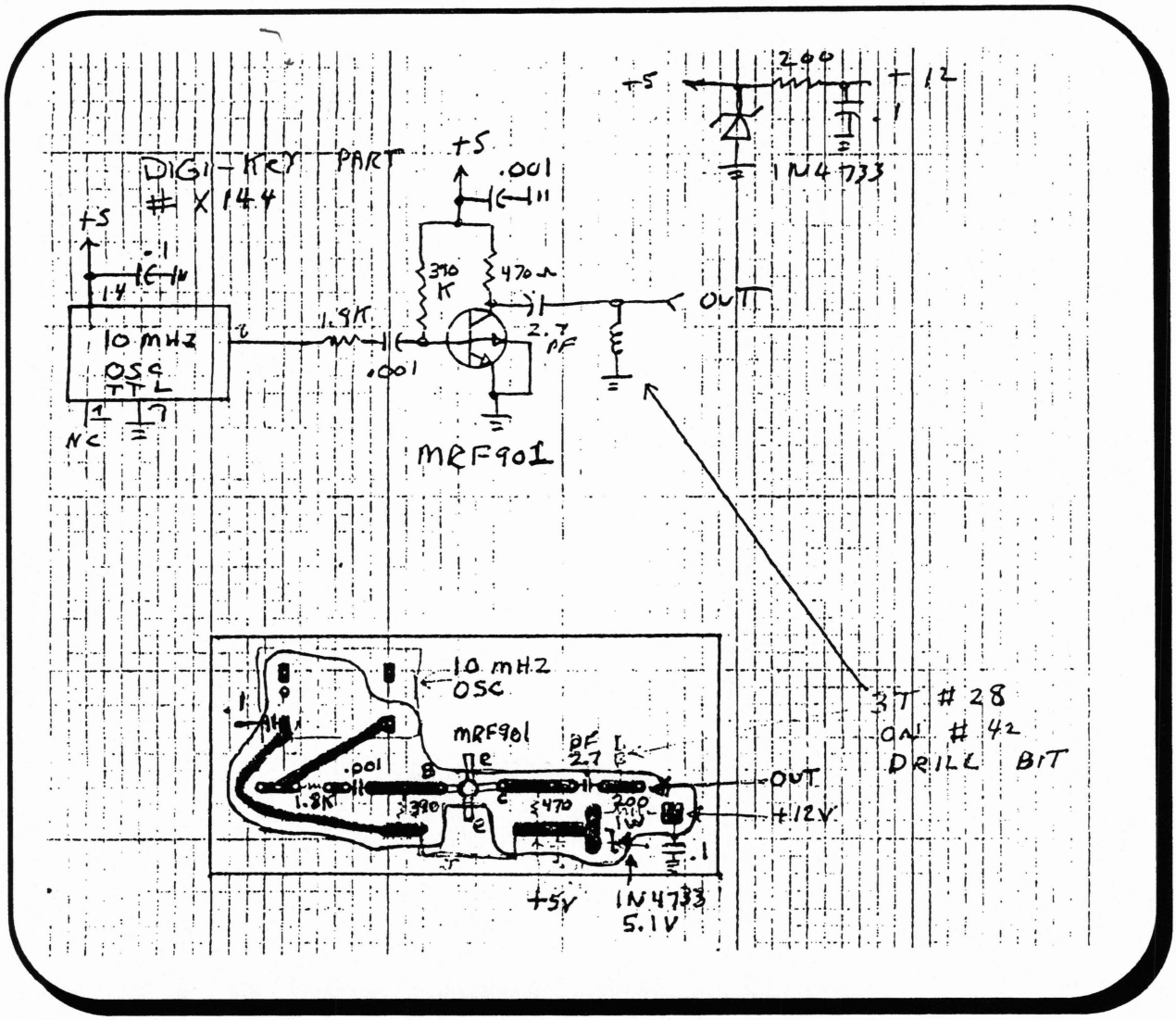

HANSON USER FEEDBACK 1

This is a series of letters from Lloyd Hanson on his thoughts about designing a Digital Center Frequency Readout circuit. It arrived about the time that I was designing my Digital Center Frequency Readout circuit. Since my background was primarily analog, I had difficulty following his logic (no pun intended) in an all digital solution. I'm still confused, but hope that this info might be usefull to the "digital types" out there!

March 24, 1987
HI:
Just a tip from W9YCB. Not too many hams are aware of the 74167, but it works well with odd ball dividers such as the RCA CA3179G and gives an output which can be displayed on any conventional counter.

I haven't looked into the SW-5800 yet but assume it is probably on the same type. The advantage is that with this one chip, you can usually go to the 2 chip C MOS, 10Mhz counter, direct without odd ball time base systems.

73,
Lloyd, W9YCB

P.S. The chip is hard to find but Jameco handles it. The specs are in the TI book.

April 6, 1987
Dear Lloyd,

Your comment "not too many hams are aware of the 74167" was very appropriate, because it includes me too!
I've looked it up in the TI handbook, and since I'm more comfortable in the "analog" world, I haven't the slightest idea on how I could use it to directly display the center frequency of the tuner.

From what I read in the data manual, I think I can see how it might be possible to display the sampled local oscillator that is divided by 256 in the prescaler, but that's only half the job. Since the local oscillator operates 610 Mhz above the RF, we still have to subtract 610 to display the RF frequency being tuned. Or, did I miss something?

If you have any ideas on how to accomplish this task with a minimum of circuitry, I would certainly appreciate your help. Since the SW-5800 modified cable tuner provides a pre-scaler output that is equal to the local oscillator divided by 256, it would be a natural to use this to indicate the frequency being tuned.

73,
Murray

18 April '87
Hi Murray:

Well I suppose there are many ways to do the job so here we go;

1- See QST, Nov. 85, & K2BLA's method.

2- Use a standard counter with a .l m sec. gate.

3- Use a modified counter to read 200 Mhz + 6l0 directly.

In any event, it is wise to sync the counter to the time base or vice versa. It is easier to sync the sawtooth to the counter. A driven sweep.

For the counter I use a 7207A and a 7217 by Intersil. The leading edge of the .l sec. clock starts the sawtooth. This is also the point where a l2l fires and holds for 2 times T1. At the end of time T1 a second l2l fires and remains on for 2 times T2, such that the readout is the frequency (200 Mhz for instance). The measuring interval is about .00l sec. and fits in to the .l sec. clock time since it is in sync. A CD-400l is used as the gate. This may be all CMOS if you like. The system is inhibited during the count on time so that pulse triggering will not take place although with a counter gate of 100 m sec. the sawtooth should be completed if the frequency is not too high. With this method the counter can be a standard unit. However if you change anything in the sawtooth it won't work. It must be set so you measure at some predetermined place after the sawtooth starts. So much for #2 above.

First get the count down to a value that can be corrected by a small Xtal OSC adjustment. Use a .00l sec. measuring interval (approximate). You can rubber the 7207 crystal a small amount. The 1600 multiplex signal can be divided down to give .00l sec. measuring time.
The 74167 will do this.

Gate this signal with the .l time base or you will have too many samples. Only l is required for each sweep, but it must be applied to the counters during the .l second on or count time.

The 7217 is a 4 digit up-down counter with preset so you should be able to work out this end ok.

You may also use the .l sec. gate to trigger a unit such as the 74l2l to give a unit time on .00l second. Use the leading edge and you will always be in the proper gate time, be careful it doesn't trigger on the clock falling edge. Use a pot to adjust gate width so that it measures the incoming signal as received from the RF unit. Set up static with f in = 200 MHz and make the pot adjustment. For the accuracy involved, this is probably the best way to go.

There are so many ways to control sweep width that its difficult to outline a way that would apply strictly to what you are doing.

What I do is use a DC pedestal on which the sawtooth rides. The start time on the sawtooth appears to change as a function on the DC level and DC position.

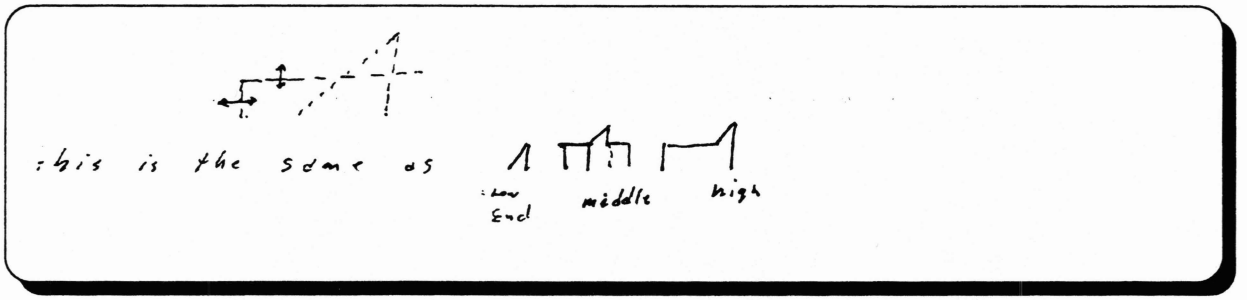

Capacitors hold a charge - so it is best to not have one sawtooth follow the other as is common in some CRT's.

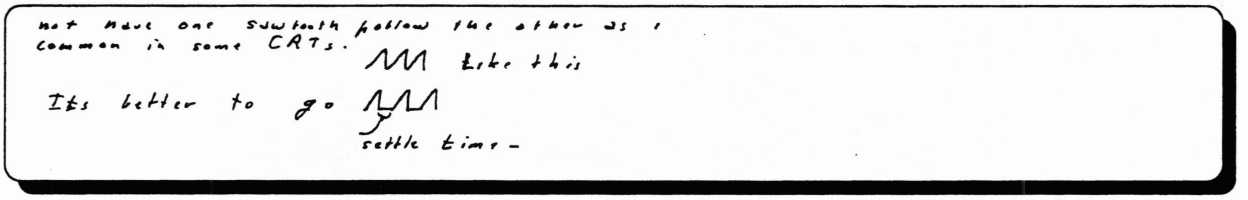

Failure to do this can result in loss of some of the low frequencies and possibly bunching at the end. The low value of the sawtooth should be the value where no further change in delta f takes place. This depends on the diode. For abrupt junction types this is usually about 1 volt or so. Hence the DC, component (if any) must be kept to 1 volt or less.

Hope this helps---Am working on my unit and an RCA 4" monitor (see Mid-Tech Electronics at) Dayton HF) mine cost $30.00 for a new unit. Just turn yoke 90 degrees, load the horizontal output with a resistor and U R in business. Its a 12V unit with synched 60 Hz vertical scan.

You will need an amp to drive the horizontal deflection coil, which now becomes the vertical.

I may see you a Dayton-- 73, Lloyd

Lots of luck in your business--Don't forget to let me know when the tracking generator is in good shape--I will send a plan of completed circuit when its finished

23 Apr 87
Hi Murray:

You might be interested in what I have decided to do.

The 4538 has 2 sections - the second is used to generate an intensity marker which shows on the CRT where measurement is being made. The idea of a center frequency was abandoned in favor

of the ability to measure any place on the CRT screen. The counter as shown will measure tuner output correctly. Be sure you adjust the gate properly.

A longer count time can be used if you divide the input RF by say 2 or 4. But don't exceed the .01 gate. VlZ: For lowest frequency of measurement there must be sufficient number of cycles passed to give correct count. I can't be more specific because I don't know much about the other tuners you have listed.

There are so many things that can be done with a unit such as this that it's hard to quit. Suppose you mount some photodiodes at some db level such that when band opens the vertical deflection triggers the circuit - bells and whistles.....

I have only checked one 7217 and it will hit 5 Mhz without a change in VCC = 5 volts. Couldn't locate factory frequency specs. Note that there are 2 versions, one for common anode and one for common cathode displays.
So far as I know both 7207 and 7207A are available. The 7207A takes a 5.24288 Mhz crystal. It's shortest time base is .1 sec. The 7207A has pull-ups in the package.

73, Lloyd

Now Lloyd switches to a different subject, suggestions on improving the Ramp Board, a subject that will be discussed in more detail in a later chapter.

27 Apr. 87
Hi ;

Well by now you probably have read K4lPVs comments on your sweep circuit. I built your unit & encountered the same problems, however the cures are simple and will make your unit perform as it should. So for your help here are the problems and then the cures which I used.

A- Slightly non linear sweep. But not bad.
B- Flat topping of amplifier section A4.
C- Regulator not holding steady with changing load.
D- Possible (probably not on all units) oscillation of voltage regulator.

Lets start with B. This is easiest for you to check. Bend up pin 14 and apply the voltage from terminal "I" (not to exceed 35 volts) to pin 14. Now the available swing exceeds the applied input. The gain will now be high enough to drive the pants off the varactor with your 78L18. I used 27 volts on pin 14. You might limit the range of the 10K pot a bit by changing R10 & Rll, and possibly put a resistor between Cl and the 100K pot. The basic cause of the entire problem is that capacitor C2 is being charged from a voltage equal to that which was applied to pin 14. Capacitor C2 charges to almost the same value as VCC. You might drop this 20 volts with a Zener to prevent overdrive. These are just ideas for you to consider as you work to improve your unit. You have economics and people to contend with while I can do what turns me on.

A- This is best solved with a constant current source- an easy solution is an MPF 102 connected as a constant current generator. See Siliconix FET Design catalog. There are also constant current diodes (same circuit) available but I find them hard to locate. One is the IN5305. A little math will show you that at t = 0, i = 400 some u amps, while a short time later the current is 10 to 13 u amps or so.
C- This is easy, replace the resistor R18 with a Zener. Watch IZT. A 250 Mw unit usually has IZT at 5 ma. or so. The current Iq is about 1.5 ma, so an adjustment in R19 may be required. C7 can be omitted.
D- A problem with some 78L... units. Not all of them do this .. depends on who made them I guess. The cure is simple. Put in the .33mfd capacitor they suggest. The electrolytic is needed only if the VCC feed line is long. You can spot this problem by putting a CRO on the output side of the regulator. The cap C4 may or may not be required. A bypass on pin 14 should be used. I used a .01. The only spikes you have are the horizontal sync and the retrace or fly back. The .01 nailed these down in my unit. You will need a good CRO to find these pulses on the VCC line.

If you want to raise the voltage out of the 78L18, just go to a higher voltage Zener but watch it. You can only go so far and then its best to use a higher voltage regulator. Seems that about 6 to 8 volts is the limit. Again, this depends to some degree on the regulator.

Now I'm going to practice what I preach and finish up my unit. Hope you made out like a bandit at Dayton -- Lots of luck on your enterprise. I like hams that do things.

CUL & 73
Lloyd W9YCB

More recently, Lloyd writes:

4 October 1991

Hi Murray:

Well, not much to tell around here with respect to the spectrum analyzer. The following may be of interest to your readers.

1- Because of strong RF fields with certain antennas, it was necessary to shield each individual unit and provide feedthru capacitors on the DC leads and coaxial cable on all signal connectors. This procedure cleared up the problems here. The antenna which caused the most problems was a vertical being tested, it also got into my computer so it had to be given some RFI treatment also.

2- An interesting display using a B &W TV will be found in "The UHF Compendium", 1 & 2 by K.Weiner DJ9HO

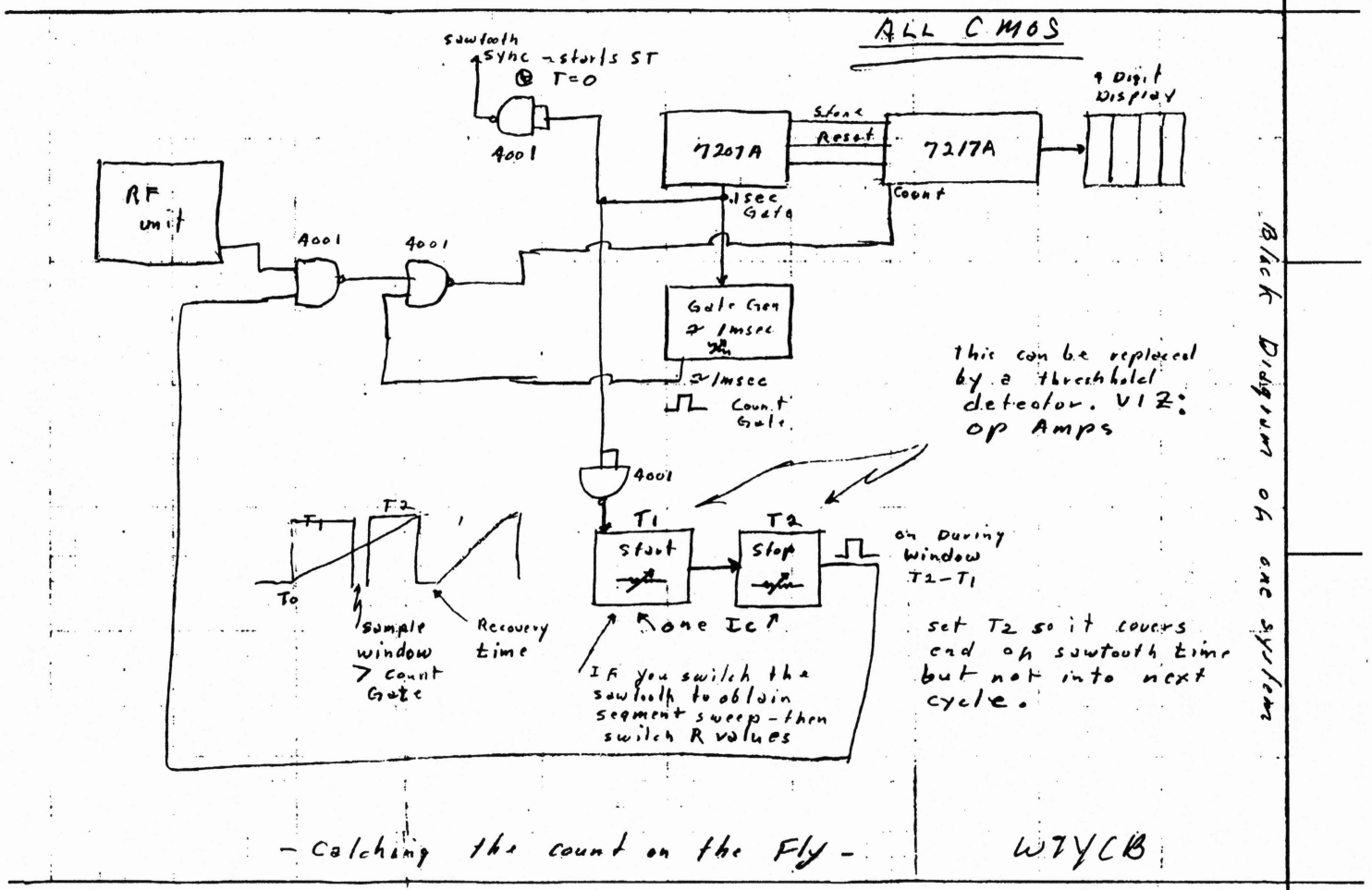
ALL CMOS
sawtooth sync - starts ST @ T=0
4001
RF unit
4001
4001
7207A
Stone
Reset
7217A
Count
.1sec Gate
4 Digit Display
Gate Gen ≈ 1msec
≈1msec
Count Gate
4001
T1
T2
Start
Stop
on During window T2-T1
one IC
T1
T2
To
sample window > count Gate
Recovery time
If you switch the sawtooth to obtain segment sweep - then switch R values
this can be replaced by a threshhold detector. VIZ: op Amps
set T2 so it covers end of sawtooth time but not into next cycle.
Block Diagram of one system
- Catching the count on the Fly -
W7YCB

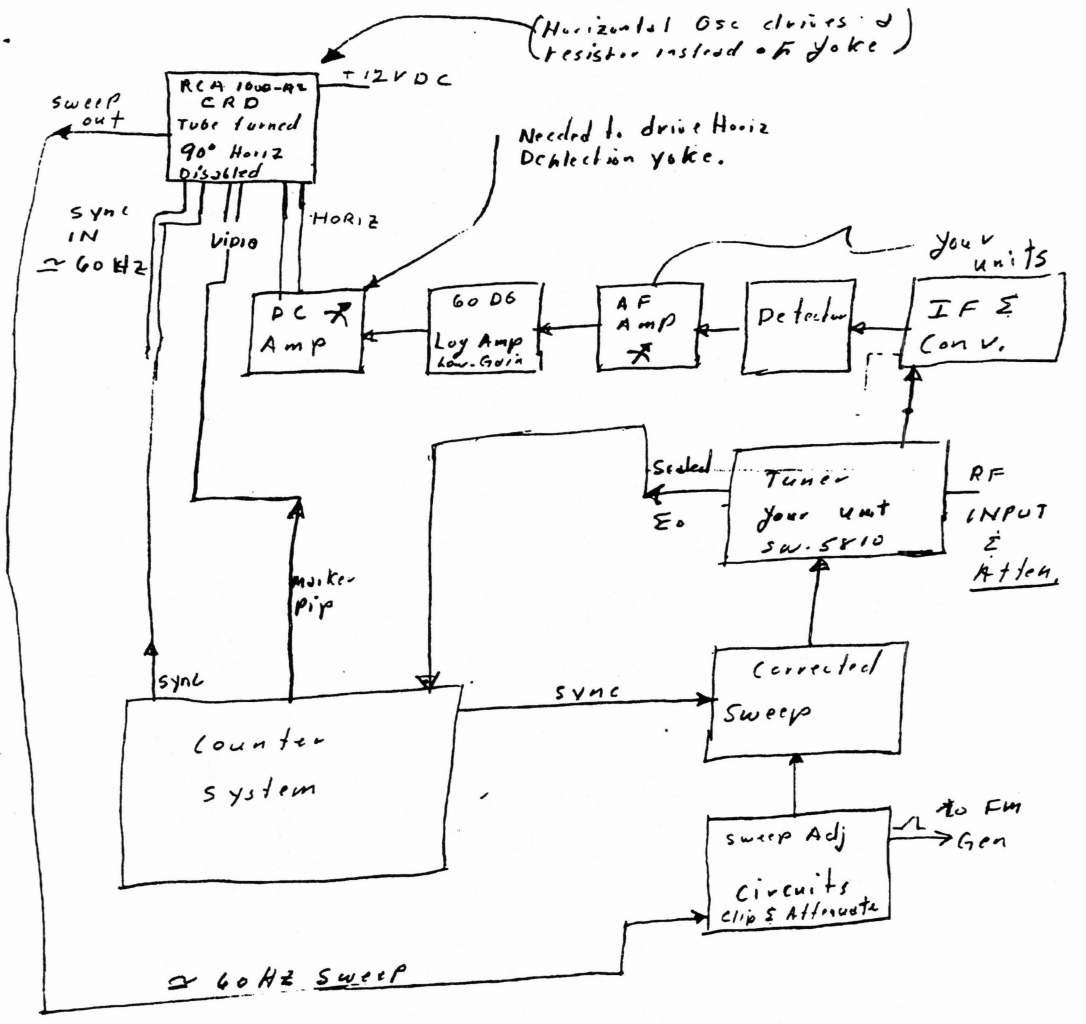

How it looks so far

A few paths left out

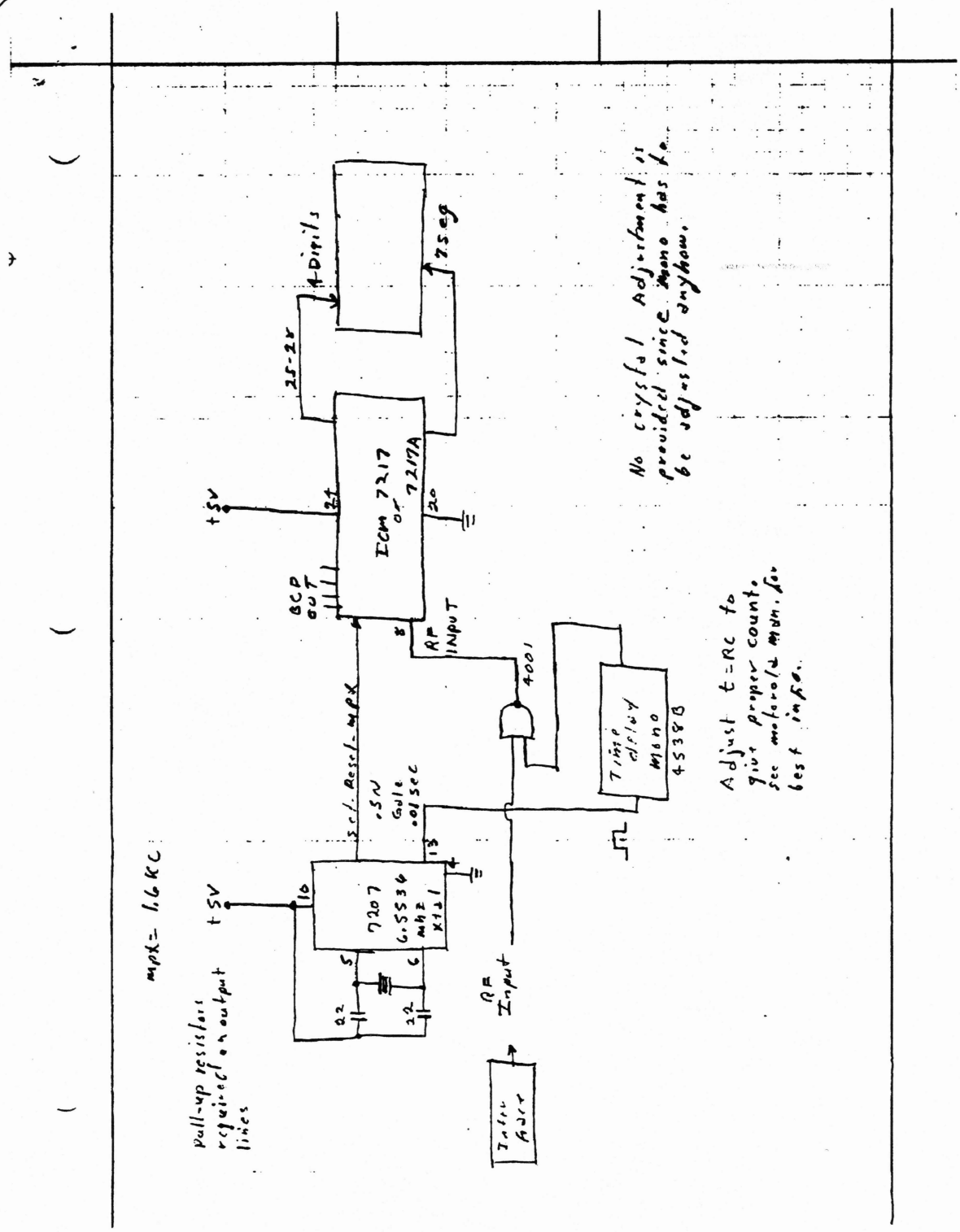
mpx = 1.6KC
pull-up resistors required on output lines
+5V
7207
6.5536 MHz
Xtal
22
22
5
6
10
13
4
Sel. Resel. MPX
.5N Gate .01 sec
RF Input
Inter Face
BCP OUT
ICM 7217 or 7217A
24
20
8
RF INPUT
4001
Time delay Mono 4538B
25-28
4-Digits
7 seg
No crystal Adjustment is provided since mono has to be adjusted anyhow.
Adjust t=RC to give proper count. see motorola man. for best info.

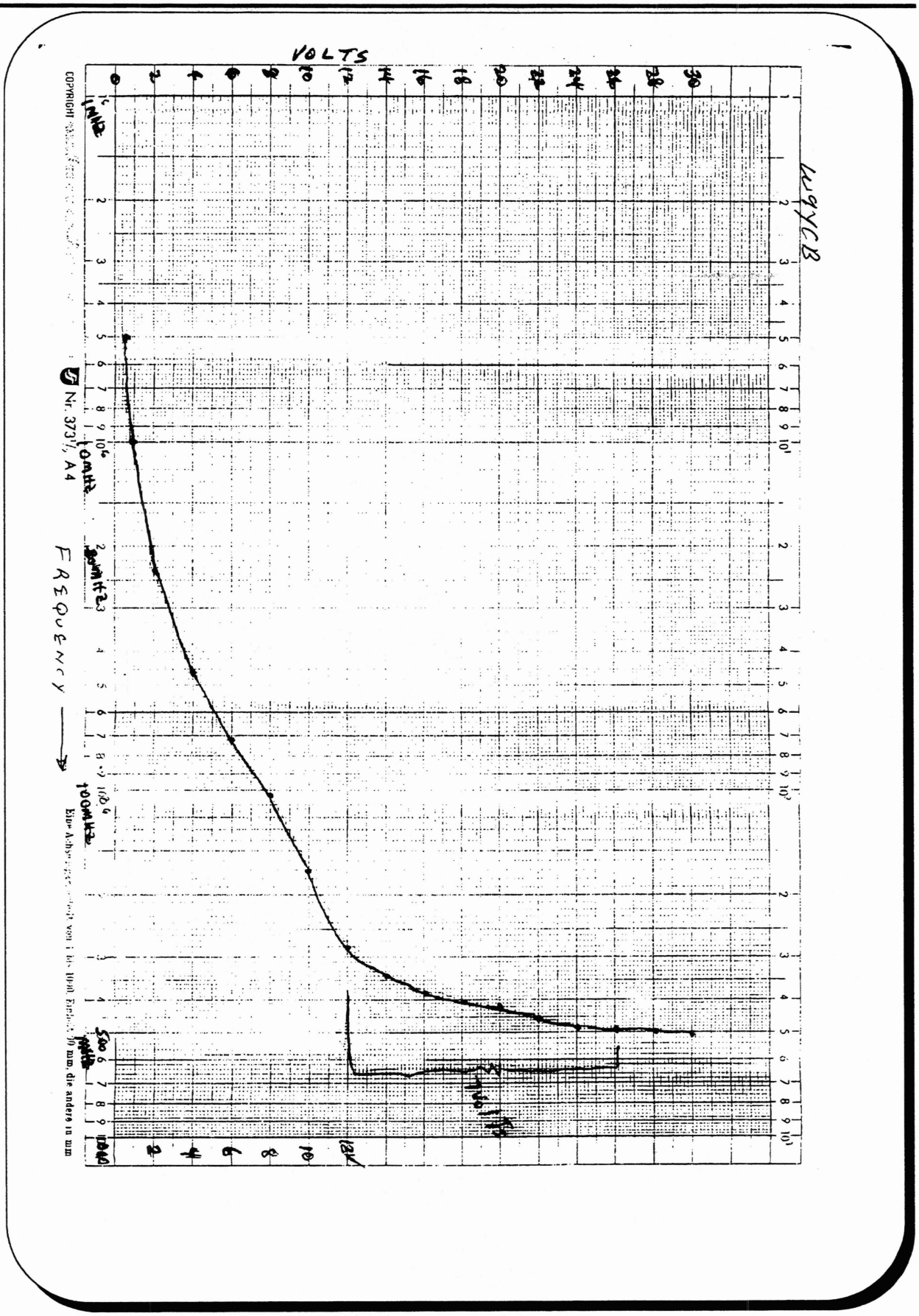
VOLTS
FREQUENCY
Nr. 373½, A 4
COPYRIGHT

3- For the computer "hackers" An inexpensive display can be made with a C-64C and video monitor. Now they can program horizontal & vertical displays with frequency printed on the screen. You will lose the program unless one uses a floppy or battery backup on the C-64 memory system.

4- With respect to frequency readout - I bought another front end and use it as a marker generator. A cheap counter module was modified to read frequency of the marker on the display screen. A signal generator would also serve the purpose.
(Our MSG-100 marker/signal generator module was designed to perform this function.)

5- I note in checking out 5 of the tuners that no two have exactly the same tracking characteristic of varactor voltage versus, frequency -- hence any sweep correction circuit would have to be chosen for the unit being used.
(See our discussion on "breakpoints" in another chapter.)

6- There are several IC chips which can provide log output up to about 60 db. The MC3356 is typical. See Also HR July 1985, p. 75 by Hans Evers, PA9CX --OJOSA

7- A linear sweep you don't want. What one wants is an even frequency division along the horizontal axis so that each centimeter covers the same frequency range. (Lloyd hits the nail right on the head!) A voltage versus frequency characteristic for one of the tuners tested is enclosed -- The varactor is obviously hyper-abrupt and provides good results for it's intended frequency of operation, but below 300 Mhz it's a mess. As you can see , the lowest practical frequency for this unit is 10 Mhz.

With the various projects being worked on around this QTH, it will be snowing by the time I get back to the synthesizer.

73
De Lloyd W9YCB
RR2 Box 265
Angola, IN 46703

HF Pac on l4.l03.33 most every day

Good luck with your venture.

DAVE RILEY — USER FEEDBACK 1

6-8-91

TO: MURRAY WA2PZO
SCIENCE WORKSHOP

FM: DAVE AA1A

YOU SAVED ME MUCH TIME AND EFFORT FROM WHERE I WAS TO WHERE I WANTED TO GO.
EVERYTHING WORKED WELL AND BEYOND WHAT I EXPECTED.
I WORK ON AN ARCO TANKER FROM LONG BEACH TO VALDEZ AND THIS WAS A MOST WORTHWHILE PROJECT.
I MADE ONE ADDITION YOU MAY LIKE:
FROM THE AFC OUTPUT PIN 7 TO A PAIR OF RESISTORS, I ADD A SWITCH TO THE TOP OF THE WIDTH CONTROL I (POINT A). THIS GIVES REASONABLY GOOD AFC WHEN TUNING ACROSS BAND AND WIDTH CONTROL IN THIS FUNCTION IS NOW 'CAPTURE RANGE' (SEE ENCLOSED SCHEMATIC).

WELL NEXT VERSION PROMISES TO BE REALLY SOMETHING WHEN I RETURN IN LATE AUGUST FOR ANOTHER TOUR ON THE SHIP.
HOME QTH IS MARSHFIELD, MA. AND WILL BE THERE FOR 2 MONTHS ON VACATION.

ENCLOSED CHECK FOR ANOTHER ORDER. AM INTERESTED IN ANY UPDATES AND CHANGES OR ANY ADDITIONS TO PRODUCT LINE.

I OPTED TO BUILD A HIGH GAIN NOISE GENERATOR INSTEAD OF USING THE TRACKING GENERATOR. THIS I USE WITH A BRIDGE FOR ANTENNA MEASUREMENTS. I MAKE AND SELL AN ANTENNA CALLED THE 'SIDEKICK'.

QST AND THE OTHER MAGS. DIDN'T DO SO WELL ON THE ADVERTISING BUT WORD OF MOUTH IS SELLING VERY GOOD. IT'S MOSTLY STAINLESS AND MOUNTS ON THE TOWER LEG, MAST OR CORNER OF HOUSE.
HAS MORE GAIN THAN RINGO OR ISO-POLE AND I ALL D.C. GROUNDED, COMES READY TO USE, (NO TRIPS TO HARDWARE STORE)

BY THE WAY, I BOUGHT A RADIO SHACK 20 WATT AMP, GUTTED IT OUT AND USED THE CASE AND CONTROLS. IT STILL LOOKS NEW WITH THE ONLY ADDITION NEEDED WAS TO ADD THE AFC SWITCH.
WITH AFC ON I CAN LISTEN TO FM STATIONS ETC.

YOU DID A GREAT JOB WITH THIS PROJECT....

Dave

ENCLOSED: RE-ORDER, SCHEMATIC, TNX.. DE DAVE AA1A/MM

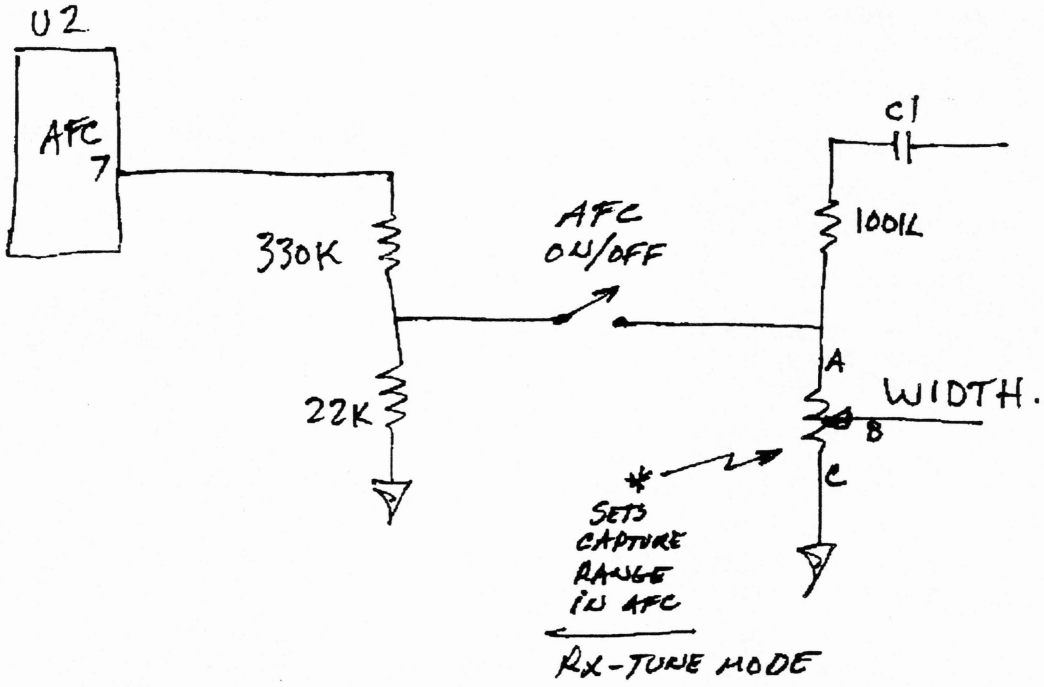
U2
AFC
7
330K
22K
AFC
ON/OFF
C1
100IL
A
WIDTH.
B
C
*
SETS
CAPTURE
RANGE
IN AFC
RX-TUNE MODE

CRYSTALS AS FILTERS

John Gebuhr, WB0CMC

In this paper I will discuss the significance and effect of spur ratio, crystal capacitance (Co) and neutralizing capacitance (Cn) as it is encountered in the four band width filter used in the "Poor Mans Spectrum Analyzer" incorporated in the units built for Gateway Electronics Institute, Omaha, NE.

In order to make a spectrum analyzer truly useable to analyze signals as to their purity, modulation characteristics and general characteristics in and about that signal, one must have a variable or selectable band width. One must be narrow to observe discrete sidebands to the extent described by Nyquist and his equations. Those equations tell us the resolving power of the analyzer of two signals close together in Hertz for a given filter bandwidth.

The response curve of the filter is also of concern, since this will be the display presented by observing a single unmodulated signal. In this respect the two 270 KHz ceramic filters supplied with the kit are ideal for that band width. They have basically, a gaussian curve with low ripple in their pass band. They have little or no spurious responses, unlike quartz filters. Any quartz filter or crystal has what is called a spur ratio. It expresses the ratio of the primary response to responses at other, non-overtone frequencies.

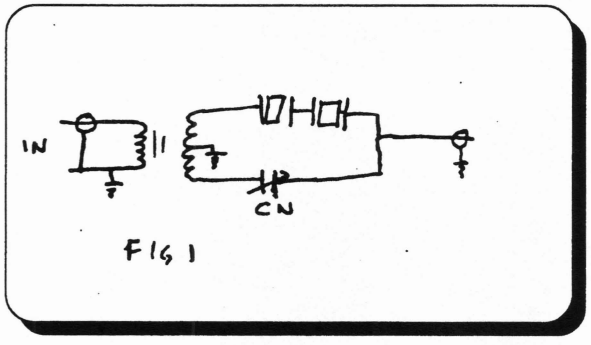

FIG 1

The circuit in fig 1 is a basic crystal bandpass filter.

Fig. 2 and 3 show two different crystals cut for the same frequency, 10.7MHz, but with considerably different spur characteristics.

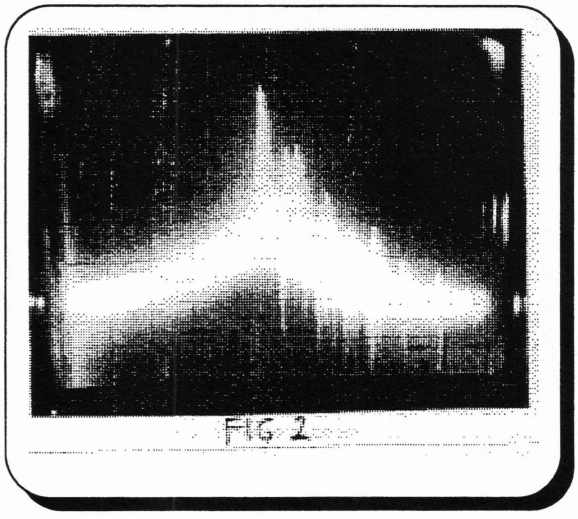
FIG 2

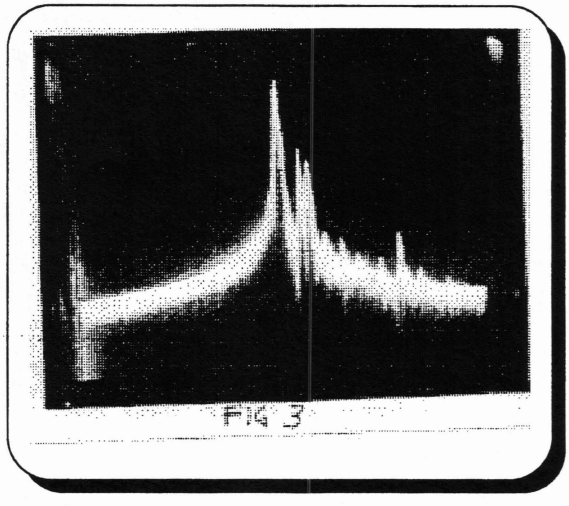
FIG 3

Horizontal is 200 KHz/cm, Vertical is 10B/cm. It is clear from this that with the crystal

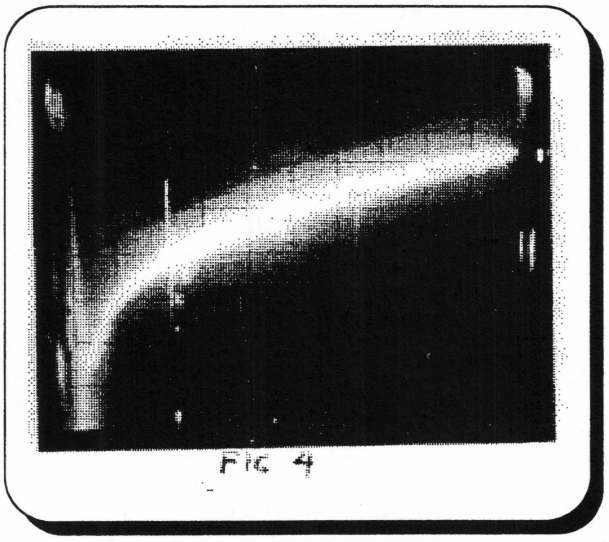

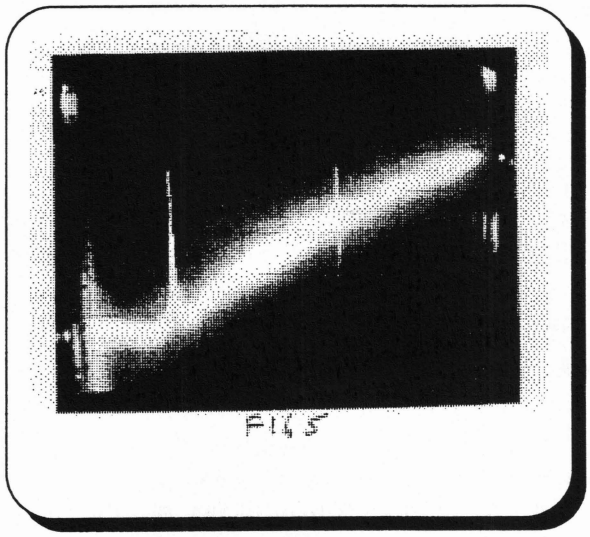

with more spurs one would see more things on the display that weren't really there. (both were neutralized).

In a circuit using frequency crystals, the capacitance of the crystal, case and associated circuitry must be neutralized to prevent (or reduce) the coupling impedances effectively in parallel with the crystal. Fig 4 shows an un-neutralized crystal.

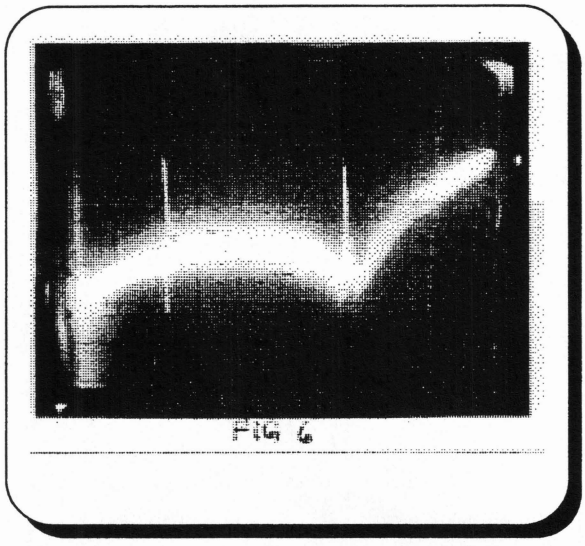

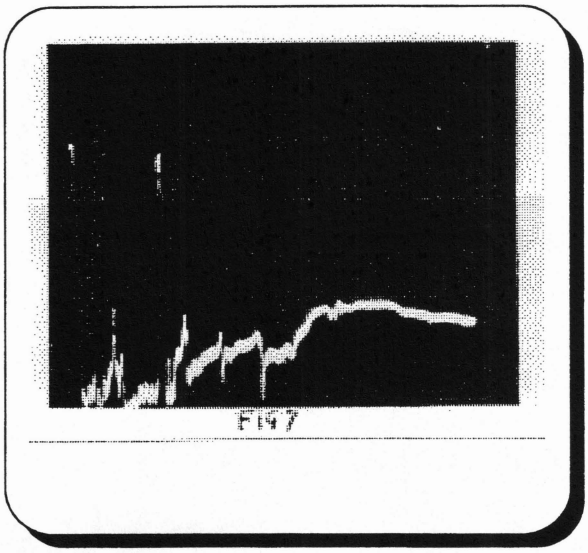

Horiz. = 5 MHz/cm. The third overtone response is clearly visible. Fig 5 shows the same crystal neutralized. Fig. 6 shows the same crystal and circuit with neutralization optimized for the third overtone. It is included only as an interesting note. It does, however, point out the desirability of using the fundamental mode of a crystal for a filter if possible. Fig. 7 is the (5 MHz/cm) response of the SFE 10.7MHz ceramic filter. Note the very low spur amplitude. The strongest is at 1/2 the frequency.

The same filter at 200 KHz/cm (fig 8) shows about 270 Khz BW and about a 4dB ripple.

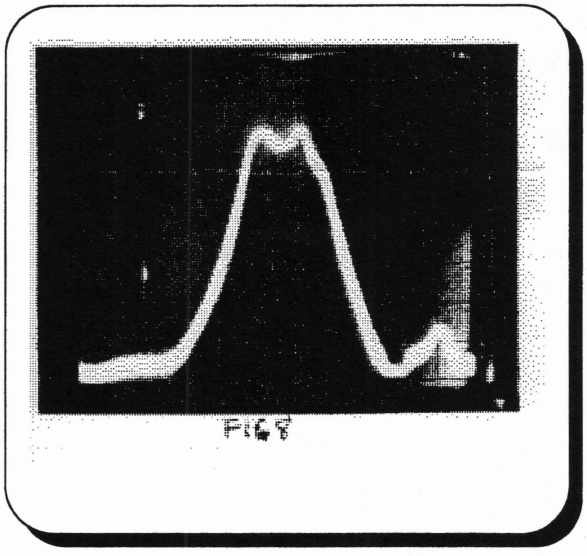

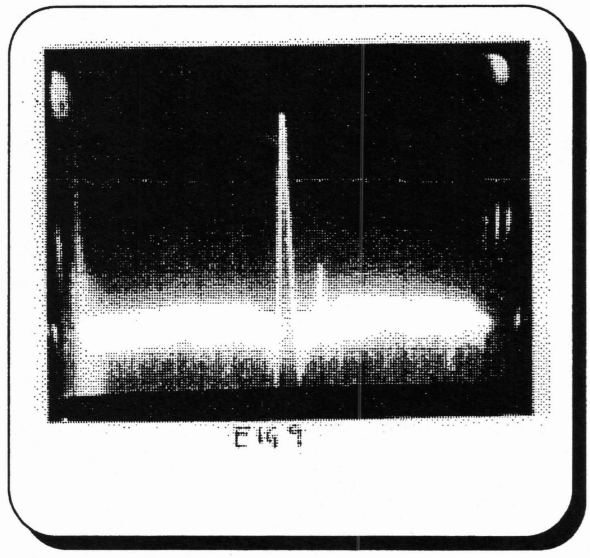

If it were in a 350 ohm system the ripple would be less. All measurements were taken with 50 ohm equipment so some latitude must be given for precision.

Fig 9 shows a quartz monolithic filter. It still has a close in spur but not as strong as that of a single, neutralized crystal. BW is about l5 KHz, sweep is 200 KHz/cm.

Bandwidth of the filter using frequency crystals is determined primarily by the Q of the crystals used. It is often expressed as (equivalent series) resistance. A 10 Ohm crystal would have less band width than a 20 Ohm one. For this filter, the frequency tolerance is relatively unimportant. Of prime importance is that the two crystals used be of the same frequency. The farther apart they are, the more the filter will appear stagger tuned and the more it's loss. The second most important specification is the resistance of the two crystals. It should be as low as possible for the narrowest bandwidth. Third, they should have a low spur ratio to minimize erroneous response in the analyzer display.

The spurious response of such a filter can be mentally interpolated out since real world spurs come in pairs equally spaced about the main carrier, unlike the typically one sided response curve of the filter itself (fig 1 & 2).

John's address is:

2340 North 64th Street
Omaha, NE 68104

WANT NEW WORLDS TO CONQUER? HOW ABOUT NUCLEAR MAGNETIC RESONANCE?

Radio Logic, Incorporated
P. 0. Box 9665, New Haven, CT 06536 (203)624-8113

Mr. Murray Barlowe, WA2PZO
SCIENCE WORKSHOP
BOX 310
BETHPAGE NY 11714
(516) 731-7628

January 1, 1992

Dear Murray,

Nuclear Magnetic Resonance (NMR) and Magnetic Resonance Imaging (MRI) employs high frequency radio transmitters, receivers, and computer science techniques to generate images or chemical spectra of organic materials. NMR/MRI techniques use methods developed between 1930 and 1945 for military RADAR. RADAR and NMR/MRI both use Transmit/Receive circuits, state of the art receiver sensitivity, and good antenna (probe) design.

NMR/MRI applications using radio frequency methods have not received much attention in the amateur radio publications (Ham Radio, QST, CQ , and 73) since these publications are concerned with radio communications as an end use of RF techniques. There are a whole score of "non-communications" usage of RF techniques and NMR/MRI would be one such use. You can "listen" to the radio signals produced by the nucleus of the hydrogen atom by exciting these photons to transmit, and make an image by reconstructing the matrix of protons. The technical challenge of building a system to do this might seem worth while to experienced amateurs.

The transmitter modulation required for selective excitation of a group of protons can be accomplished by using techniques similar to the early days of single sideband modulation, using phasing (audio multiplication by RF) techniques. The Science Workshop "Poor Man's Spectrum Analyzer" provides a useful instrument to adjust the required circuits to assure a correctly aligned phasing-type SSB transmitter. No, the protons do not mail QSL cards, but the thrill of capturing a Free Induction Decay might serve as a substitute. All that is required is lots of patience and visits to flea markets, a few books on the subject, a large magnet, and determination.

WADE HOLCOMB USER FEEDBACK

Radio Logic, Incorporated

I have been building simple NMR systems since 1957, first using the earth's magnetic field as a free proton magnet source. Since 1982 I have been a part of the technical support team at Yale's NMR/MRI instrument group, certainly the most enjoyable time I have had using short wave techniques since getting my original ticket in 1938 (W9IMB).

I am unaware of any amateur magnetic resonance interest or support group at this time, but this would be a way of developing and sharing techniques and problems.

Sincerely,

Wade G. Holcomb, W1GHU

GEORGE HOFFMANNER USER FEEDBACK

205 Quaker Ridge Rd.
Timonium, Md. 21093
Feb. 13, 1990

Dear Murray,

Enclosed is the schematic and a before/after plot of the tuning linearizing that I applied to an SW-5800 tuner.

Yours,
George H. Hoffmanner, N3ESO

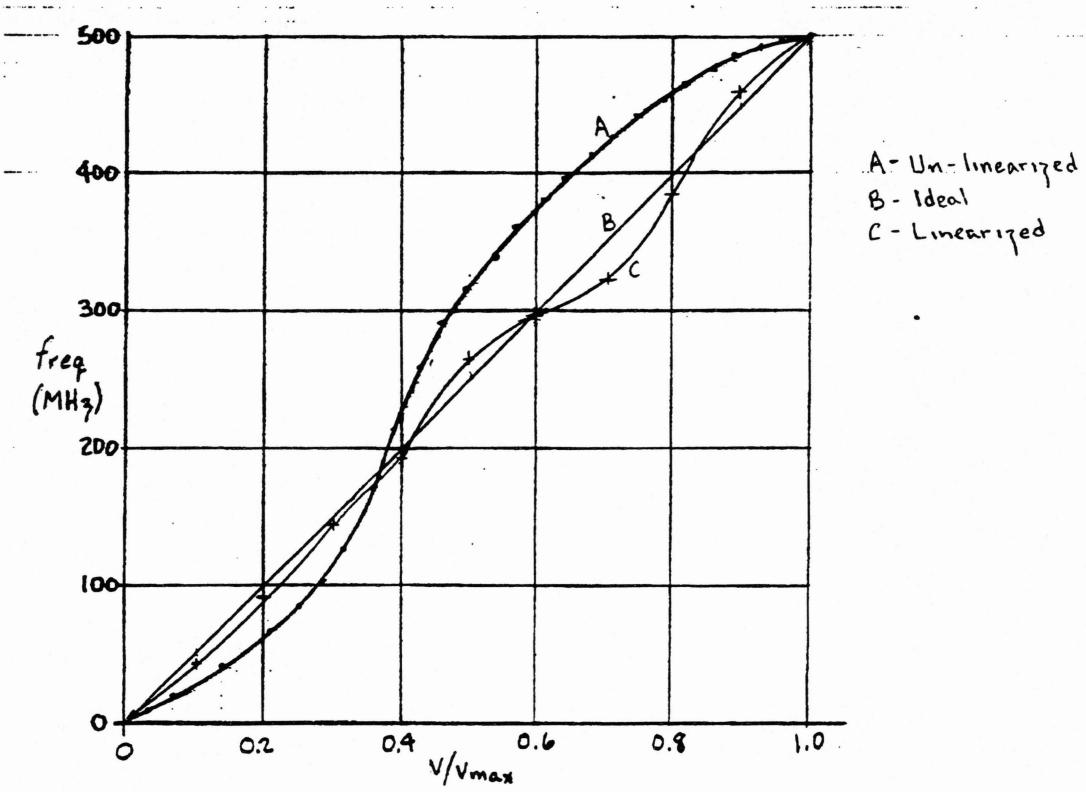

for curve A: V/Vmax @ tuning varactor, Vmax = 28 v.
" " B: V/Vmax @ Tune pot. wiper ③, Vmax = 3.8 v.

Sweep "off" both cases

Before / After - SA Linearizer
2/6/90 GHH

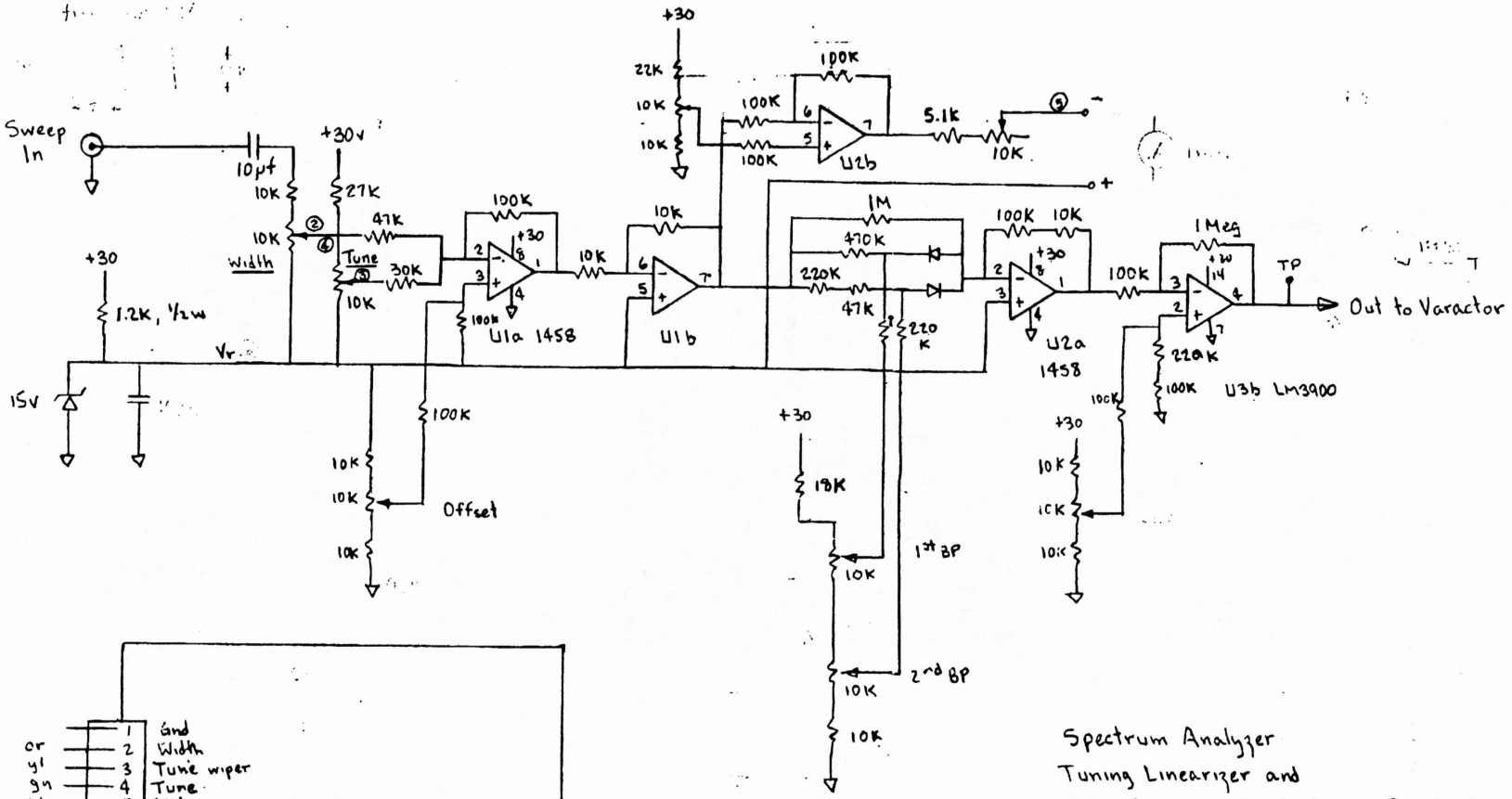

Spectrum Analyzer
Tuning Linearizer and
Meter Driver - Single Power Supply
11/22/89

Rev A 12/6/89
Rev B 12/10/89
Rev C 12/29/89

D.P. RATHKE USER FEEDBACK

D.P. Rathke
P.O. Box 191
Alamo, CA 94507

10/23/88

Dear Murray,

I thought you might like to see what one builder did to your wonderful gadget.

As you can see, I am no pro at this game. I am a very retired mechanical engineer, but with a long interest in this sort of thing although I am not a ham. You will see that it is not quite finished but I am already having a great time with it, presently on antennas. This thing beats sex anytime, especially for an old duffer like me.

You asked somewhere for comments and suggestions, etc., so here goes.

No doubt you are aware of all these things already.

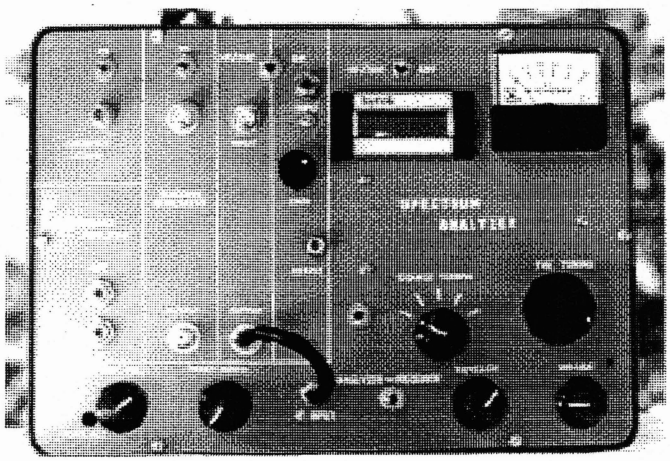

Ramp Board

1.) R2/R3 circuit error.

2.) Made the "width" pot an audio taper, and and added a resistor "above" it (50K pot, 68K resistor).

3.) Give approx. voltages required at top and bottom of center freq. pot - or resistor chain.

4.) Indicate that it requires 0 to B+ to "swing" the tuners full span.

5.) Suggest that the decoupling unit (.01 and 1 Meg) be added to the feed to each tuner and locate the voltage divider between them and the Ramp Board.

6.) I divided the tuning range into 5 sections (~ 100 MHz each) for coarse tuning. Had to "tailor" the resistors in the divider chain to give this result since the tuner V/Freq. is not linear. Also, a high current is required in the divider chain because the pot/chain ratio has to be high in order to eliminate gaps in the tuning, and at the same time

providing enough feed to the op-amp. I ended up with a 10K pot and the divider chain thus:

100(R10)•150•100•50•100•150•82(R11)

10K

pot

Of course this makes the U.H.F. tuning a bit non-linear, but, as you say, you can't win them all.

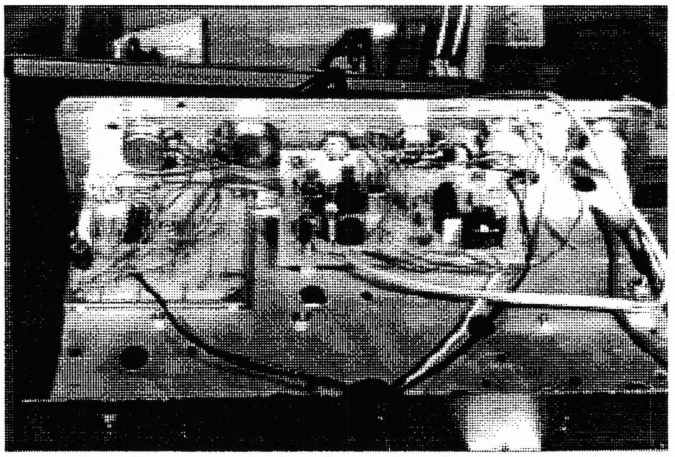

Main Board

1.) Give approx. input frequency (circuit says 45MHz. Not so.)

2.) Perhaps you should give approx. frequency range for the tuned oscillator. (some of us have counters.)

Tracking Generator

1.) On Fig.1 add "E" on Main Board" where tracking Adjust feeds in.

Frequency Readout

1.) I replaced R17 with a 6V zener diode. Much more stable.

2.) Made R12, 10K.

3.) Note from photo that I had to make readout display power supply from a battery in order to cope with the "floating" "delta V" of the unit.

I suppose you have not been able to find a shortwave varactor type tuner (the bottom end of the cable tuner is a bit tricky) or we should have heard about it. And if you have any more wonderful things in the works, let me know.

Again, thanks for many enjoyable hours already spent with the machine, and I've only just started!

Yours sincerely,
D.P. Rathke

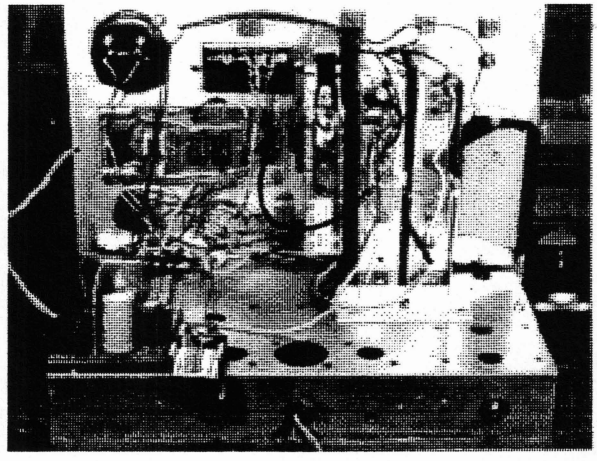

More recently:

1/4/92

Dear Murray,

First I want to thank you for starting me off on this fun trip. Enjoyed every minute of it!

Since our last correspondence I changed the whole unit and rebuilt it generally as described in Helfricke's article of Nov. 1985 Q.S.T. except that I incorporated a few changes as outlined in the enclosed schematic. Used your tuners, etc. The unit looks the same as before except that I have a ten turn main tuner and a single fine trimmer. Find that I need the 10MHz & 1Mhz markers very much. I would have liked a bit more selectivity at the shortwave ranges - the 500KHz sweep is a bit flaky.
Regards,
D.P. Rathke

(See schematic on the next page).

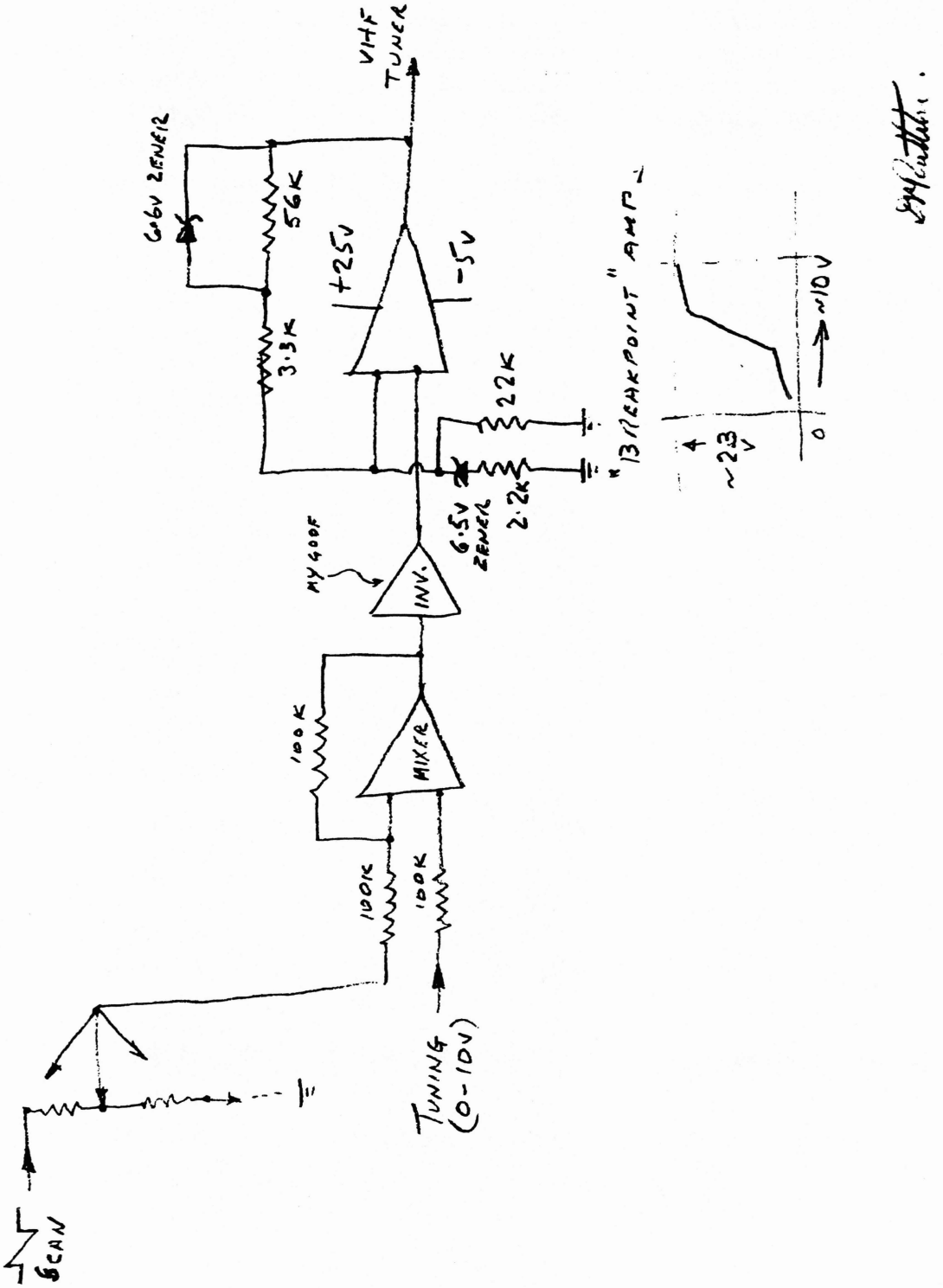
VHF TUNER
68V ZENER
56K
3.3K
+25V
-5V
22K
2.2K
6.5V ZENER
MV400F
INV.
MIXER
100K
100K
100K
SCAN
TUNING (0-10V)
"BREAKPOINT" AMP
~10V
~2.3 V
0

HENRY WELLS USER FEEDBACK

Henry comes up with a clever modification of the Digital Readout Board to allow him to use a 0-1Ma meter as the center frequency display. Don't confuse his solution with the idea that he is just reading the tuning voltage. There is no direct relationship between the varactor tuning voltage and the frequency, because the transfer characteristic (voltage vs frequency) is not a linear function. This refers back to all the comments on "linearizing" the sawtooth sweep waveform many of our users have written about in their letters, and, Joe Carr's (K4IPV) article in Ham Radio Magazine.

Henry G. Wells, W1TNE
217 No. Shannon Ave.,
Indialantic, FL 32903

6/14/88

73's OM-

Since I'm Scotch, I didn't want to spend $27 for a DVM, so I used a 1Ma meter I had sitting around. Also had to use one other section of your Quad Op Amp, but it works fine.
Schematic:

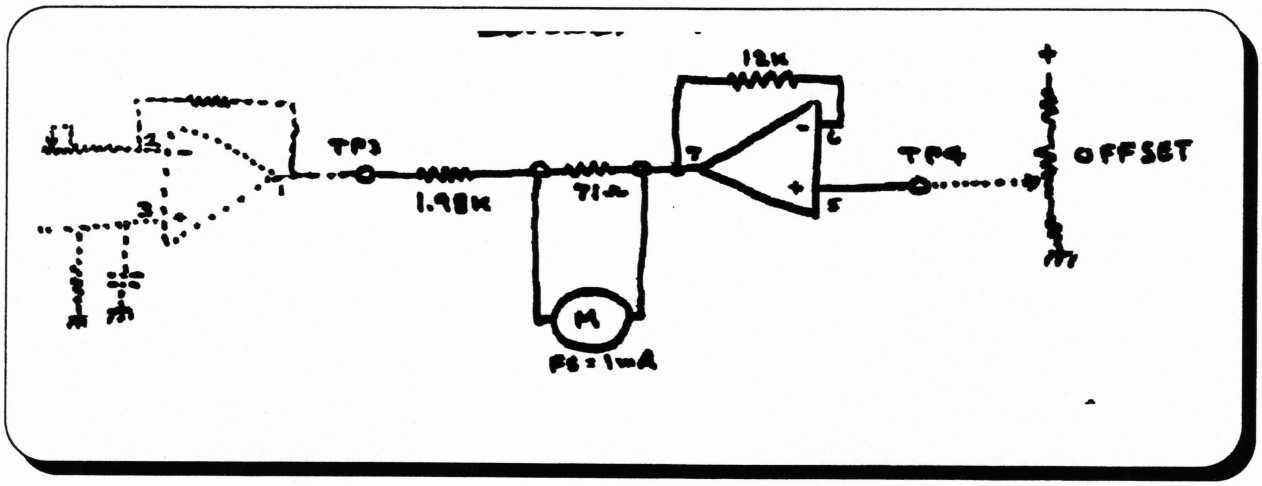

Only additional parts are 3 resistors and the meter! Have to jiggle gain and feedback slightly for correct Zero and Full scale, but no problem.

Best,

Hank, W1TNE

HENRY WELLS USER FEEDBACK

After learning about my plans for this book, he graciously sent along a more complete schematic, along with a photo of his completed unit with the Analog Meter Center Frequency Display.
He also sent along a schematic of a Sawtooth and Triangle Sweep Generator for the Poor Man's Spectrum Analyzer.

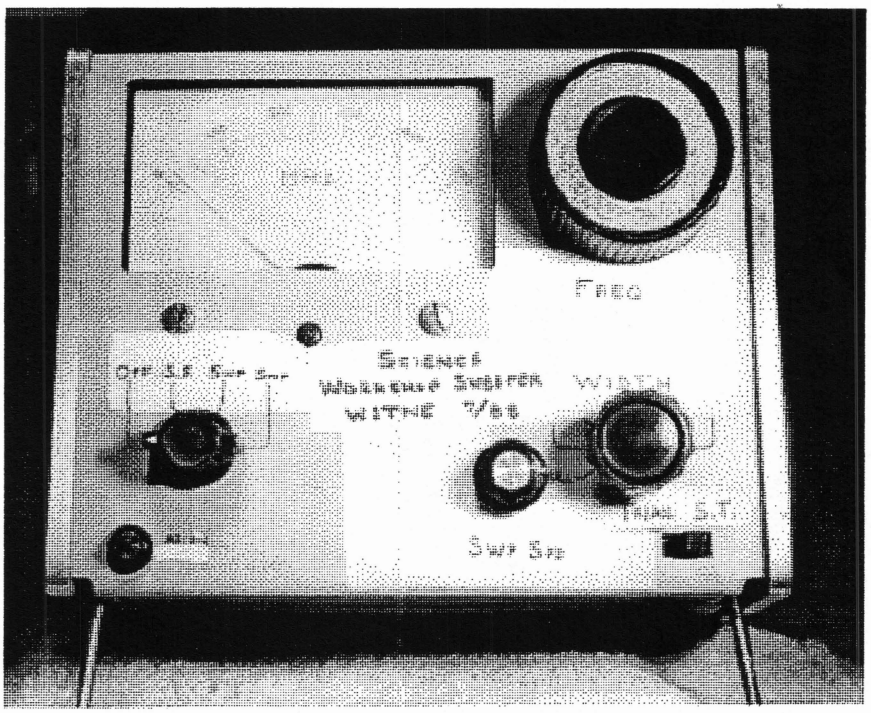

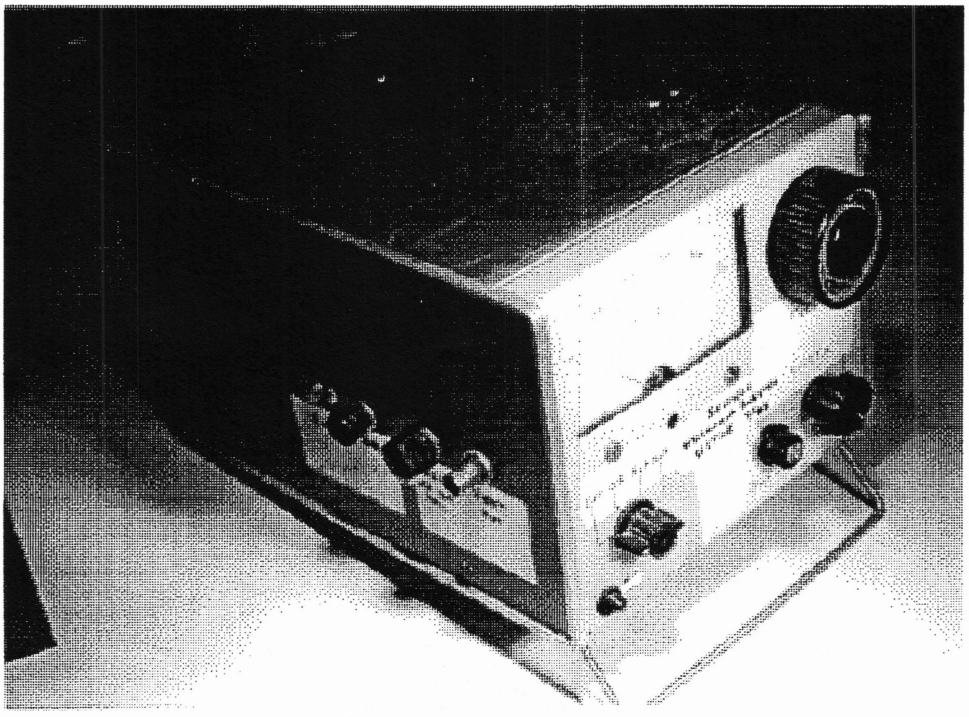

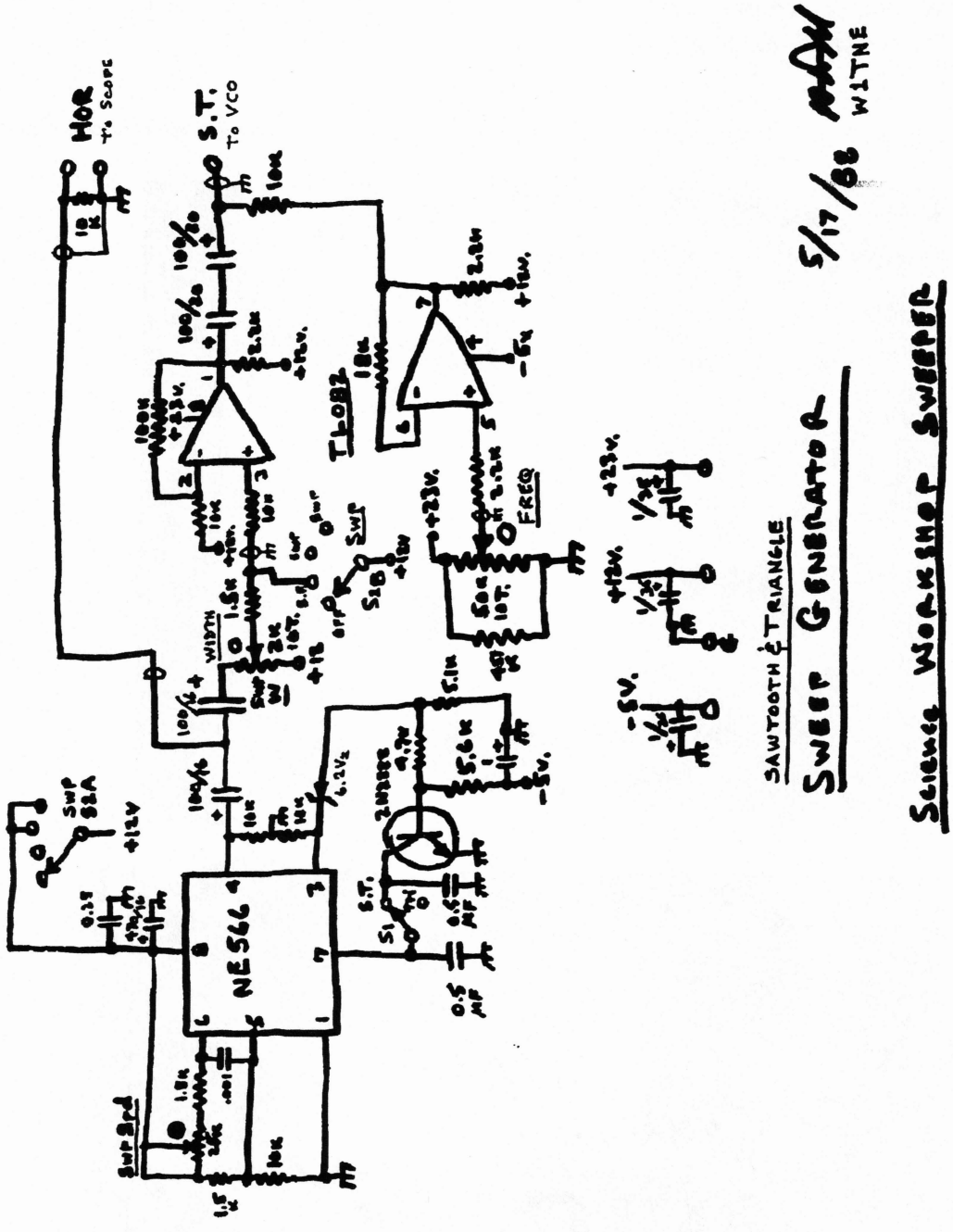
HOR
To Scope
S.T.
To VCO
NE566
TL082
FREQ
WIDTH
SWP
SAWTOOTH & TRIANGLE
SWEEP GENERATOR
5/17/88
WITNE
SCIENCE WORKSHOP SWEEPER

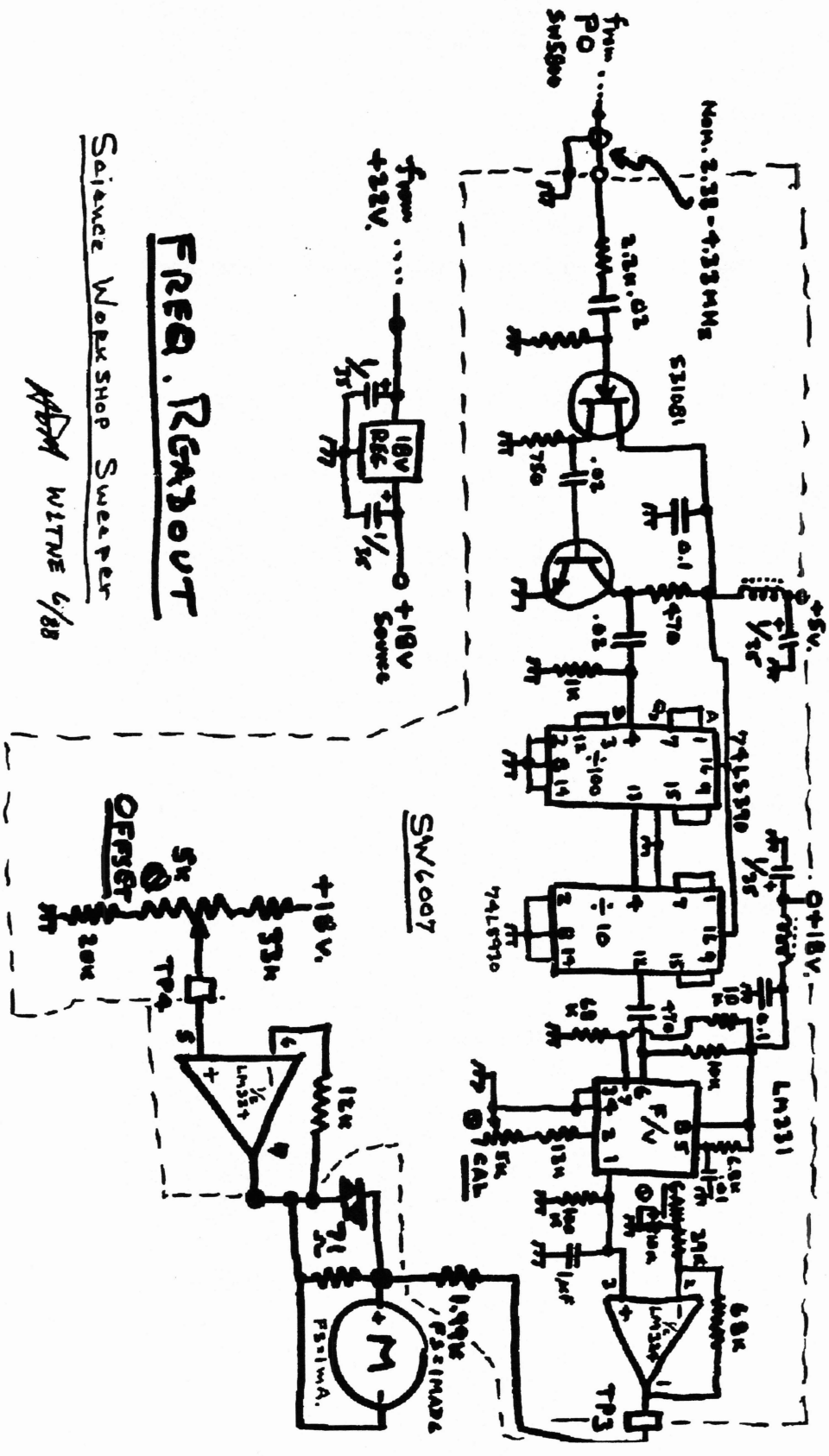
FREQ. READOUT
Science Workshop Sweeper
WITNE 6/88
SW6007
OFFSET
+18V.
+5V.
LM331
TP3
TP4
74LS390
74LS930
S31081
+18V Source
18V REG
+22V.
FS=1mA.
FS=1MADC

STEVEN GUERRA USER FEEDBACK

STEVEN (WB5LCN) SUGGESTS AN ALTERNATIVE METHOD OF CALIBRATING THE DIGITAL FREQUENCY READOUT INTERFACE BOARD, USING A COUNTER.

HE CAN BE REACHED AT :

5100 EDGECLIFF DRIVE

WICHATA FALLS, TX 76302

SW-6007

USE THIS PROCEDURE IF YOU HAVE A FREQUENCY COUNTER

a.) Set Center Frequency of analyzer most anywhere.

b.) Frequency count the input to the Digital Readout Interface Board.

c.) Adjust R16 so that the voltage at TP2 equals the frequency (in MHz) that you counted above, i.e. 4 MHz count at the input would require you to adjust R16 for 4.00 volts DC at TP2.

d.) Adjust R18 for 2.56 times the TP2 voltage (at TP3).

e.) Adjust R19 as follows:

Connect DVM between TP3 and TP4.
Subtract 6.10 volts from the voltage at TP3.
Adjust R19 for this voltage.

The above tuning procedure is more accurate, in that it frees you from inaccuracies in centering the signal on the CRT.

HUGH WELLS USER FEEDBACK

Science Workshop
Box 310
Bethpage, NY 11714

July 9, 1987

Dear Murray,

Thanks for the fast response to my request for info on the 0-500mhz converter.

I recognized that it was double conversion and only suspected that it was operating at a frequency up near 600mhz. However, I was not about to dig into it without considerably more information. I see now from your description that I have little or no control over the output I.F. frequency. I will fret no longer and use it as is. I am extremely pleased with the tuner and the range of frequencies it covers.

I'm using the three band tuner and your receiver board in one analyzer and the 0-500mhz tuner in another. The sweep signal for the three band tuner comes from the horizontal of a Tektronix scope. Sweep for the 0-500 tuner comes from my ramp board and is used to drive a different Tektronix scope which does not provide a sweep output.

For further explanation, my plan was to use the tuner ahead of a 30D receiver which has a 30-50mhz input to gain the narrow passband for an analyzer. While waiting for your response, I built a converter to shift from 63mhz to 47mhz. The converter allowed me to feed the tuner into the receiver as planned. Yes, it worked quite well. In fact, the passband is really too narrow for searching around the bands, etc. Although, the narrower passband was satisfactory for looking at a known signal. Being able to switch between the wide and narrow dispersion is of great benefit to me.

Per your request, I'll sketch the ramp generator I'm using. As you can see, it is the common UJT circuit. Although not perfectly linear, it works quite well. The non-linearity is most evident when the sweep of the scope and ramp board have different linearity characteristics. As a comparison of the display, recall the non-linear characteristics of the 884 gas tube sweep generator. This tube was used in the older Dumont scopes. The display of a sine wave would be wider on one end of the trace than the other. The condition is not serious and one gets used to it quickly.

Thanks again for the quick response and making the tuners available.

73,

Hugh Wells W6WTU
1411 18th St
Manhattan Beach, CA 90266

p.s.

I'm in the process of writing an article on TV tuners for ham use. Do you have VHF and UHF tuners available? I could use a source reference.
Thanks STANDARD TV

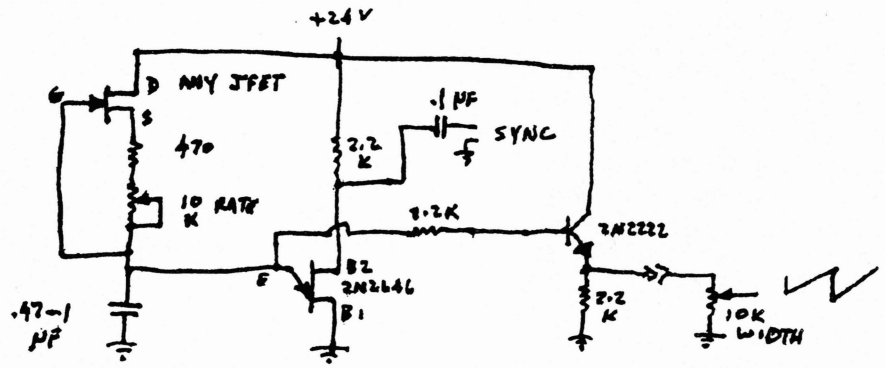

RAMP GENERATOR

HUGH WELLS USER FEEDBACK

Input from Hugh Wells, W6WTU

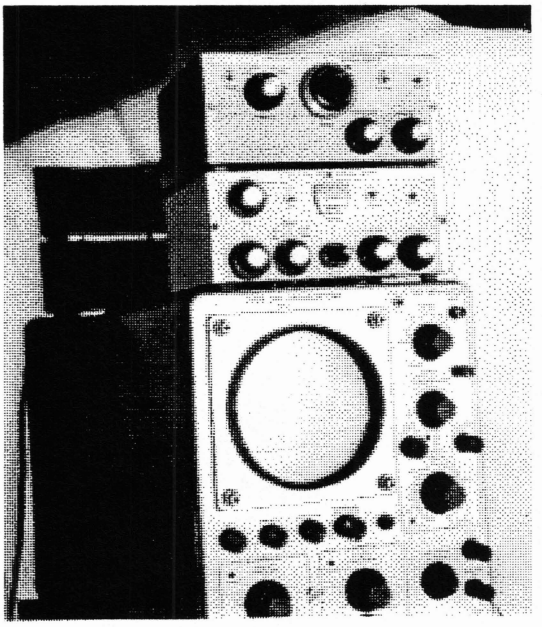

Photo 1 shows two spectrum analyzers stacked on top of an oscilloscope. The lower analyzer has a built-in Science Workshop receiver which provides both AM and FM detection of the received signal. The audio output from the detectors is selected by a switch for either AM or FM which is then amplified to drive a speaker mounted on the rear of the cabinet. Two varactor tuned TV tuners are mounted internally to provide a frequency coverage from 39mhz to 9OOmhz in three bands (39-86, 94-214, 401-9OOmhz). A ten turn pot with a 100 increment vernier dial is used for controlling the tuning voltage to the varactors. A supply voltage of 24 volts is required to enable the full tuning range. The multiturn pot and dial provide a reasonably slow tuning rate and easy resetability when returning to a designated frequency. A look-up table is glued to the top of the cabinet and is used to translate the dial setting to the received frequency or vice versa.

An RF gain control is mounted on the front panel to provide control over the receiver sensitivity. Control over the RF gain is necessary to prevent receiver overloading when viewing a strong signal being generated typically by a project on the workbench. The RF gain is usually adjusted to maximum for signals received via an antenna. A panel mounted S-meter shows the relative strength of a signal and is also used for peaking the signal while tuning the receiver over the bands.

Other front panel controls are audio volume, squelch, and sweep width, When sweeping the analyzer during spectrum viewing, the sawtooth signal used for sweeping is obtained from the oscilloscope. For the oscilloscope shown, the sawtooth sweep voltage is conveniently obtained from a terminal mounted on the scope's front panel. The amplitude of the sawtooth voltage is varied by the sweep control on the analyzer and is mixed with the tuning voltage to provide a variable width spectrum display on the oscilloscope. A switch is also provided to completely remove the sawtooth signal when it is not needed. The sweep pot, even though at minimum, does not completely remove all of the sweep voltage. When used as a receiver, a small background hum will be noted when the switch is left in the "ON" position.

The upper analyzer provides two frequency bands for continuous coverage from 1MHz to 500MHz, but there is no built-in receiver making it dependent upon an external receiver. A cable TV tuner is used for the low band and a UHF TV tuner is used for the

high band. Some modification was required to both tuners to extend their total frequency ranges. A linear sawtooth voltage for band sweeping is generated internally and a Pot located on the panel controls the sweep width. Also, a sync pulse is generated and is used for synchronizing the sweep of an oscilloscope.

These analyzers may be used together or independently as desired. When used together, the upper analyzer is used only as an RF converter feeding the lower receiver. Spectrum sweeping is done by the lower analyzer although it could be done as well by the upper one utilizing its internal sweep capability. The advantage of the upper analyzer is the continuous frequency coverage and internally generated sweep voltage. It also enables the use of any oscilloscope other than one providing access to the horizontal sweep.

When used separately, the upper analyzer is used with an independent receiver and oscilloscope. Also, there are occasions when it is convenient to have two analyzers operating at the same time but on different frequencies or functions. Receiver options are many for use with the upper analyzer. As an example, any AM, or FM receiver capable of tuning to the I.F. output (46-63mhz) of the tuners may be used. The use of a low band public service communications FM receiver as an I.F. provides improved dispersion of received signals. Communication receivers have a narrow frequency passband and provide very good separation of signals displayed by the spectrum analyzer. Because of the narrow passband, the tuning rate appears faster and mechanical or electrical vernier tuning becomes desirable for ease of tuning. When an FM receiver is used, a connection must be made to the first limiter to obtain a DC voltage output which varies as a function of the amplitude of the received signal. Communication receivers usually provide access to the limiter at either a test point or through a test set connector. The DC voltage is used to drive the vertical amplitude of the oscilloscope during spectrum analysis.

Photo 2 shows a Science Workshop receiver board mounted in a small cabinet with a power supply making it a self contained receiver. As such, the receiver can be used as the I.F. and detector for TV tuners used in either a spectrum analyzer application or for frequency coverage within the tuning range of the tuners. The receiver can also be used as an I.F. while testing unknown tuners. A panel mounted toggle switch selects the option for detecting AM or FM modulation. The knobs are for volume and squelch.

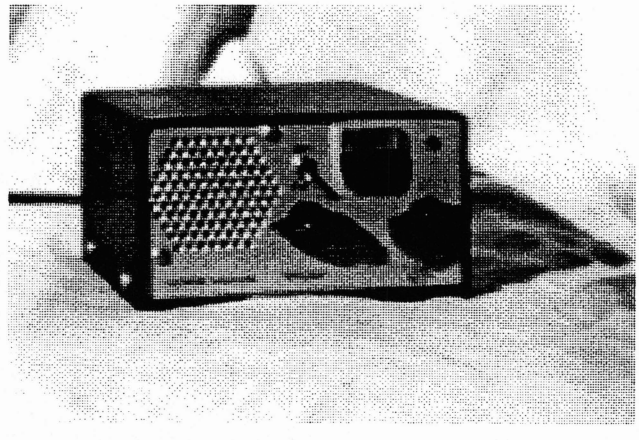

The S-meter indicates the relative strength of the received signal and serves as a tuning indicator.

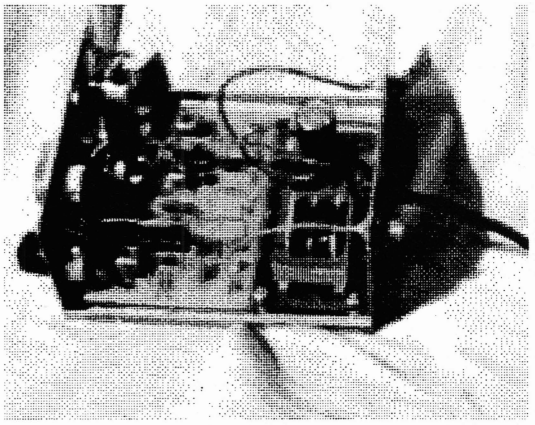

Photo 3 shows the inside of the receiver cabinet with the receiver board mounted toward the front and the power supply mounted to the rear. Quarter inch long standoffs are used to mount the boards above the metal chassis. IC's are mounted in sockets in the event they may need to be changed. The nearest jack on the back panel provides the DC voltage used to drive the vertical display. The upper most jack is the RF input coupled through a short length of RG-174 coax cable.

BOB YEREB USER FEEDBACK

Bob, who obviously has access to some sophisticated test equipment, sends along some plots he made with a HP plotter.

He includes a circuit for a ramp generator, as well as some photos of versions IV and V of his "Poor Man's Spectrum Analyzer".

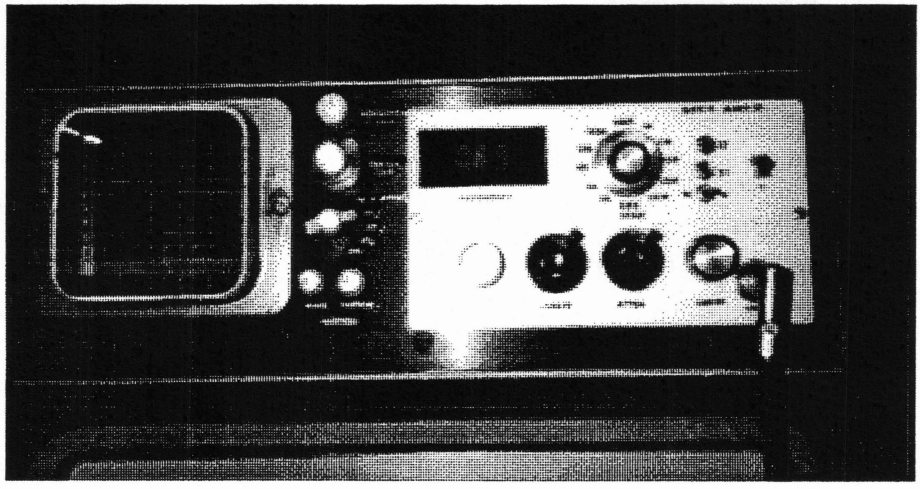

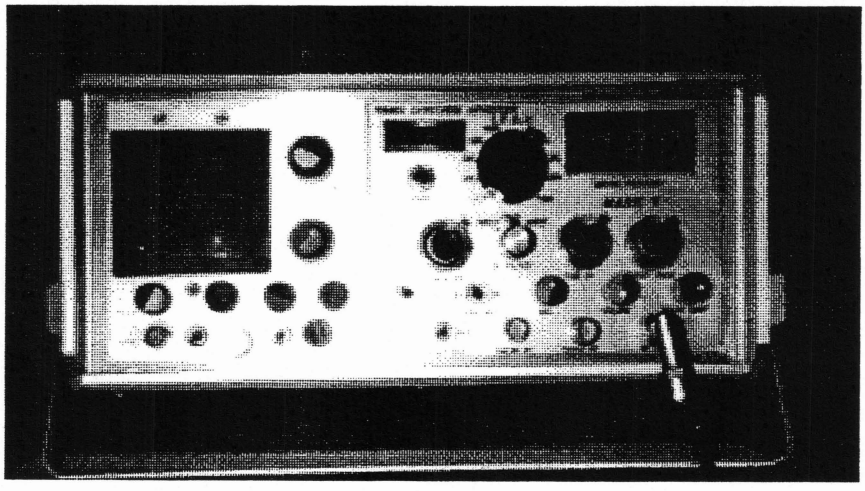

Bob Yereb, W8MIG
501 Southern Avenue
Columbiana, OH 44408
June 3, 1988
Dear Murray,
Thought you might be interested in the spectral purity of your Tracking Generator.

(See the following pages)

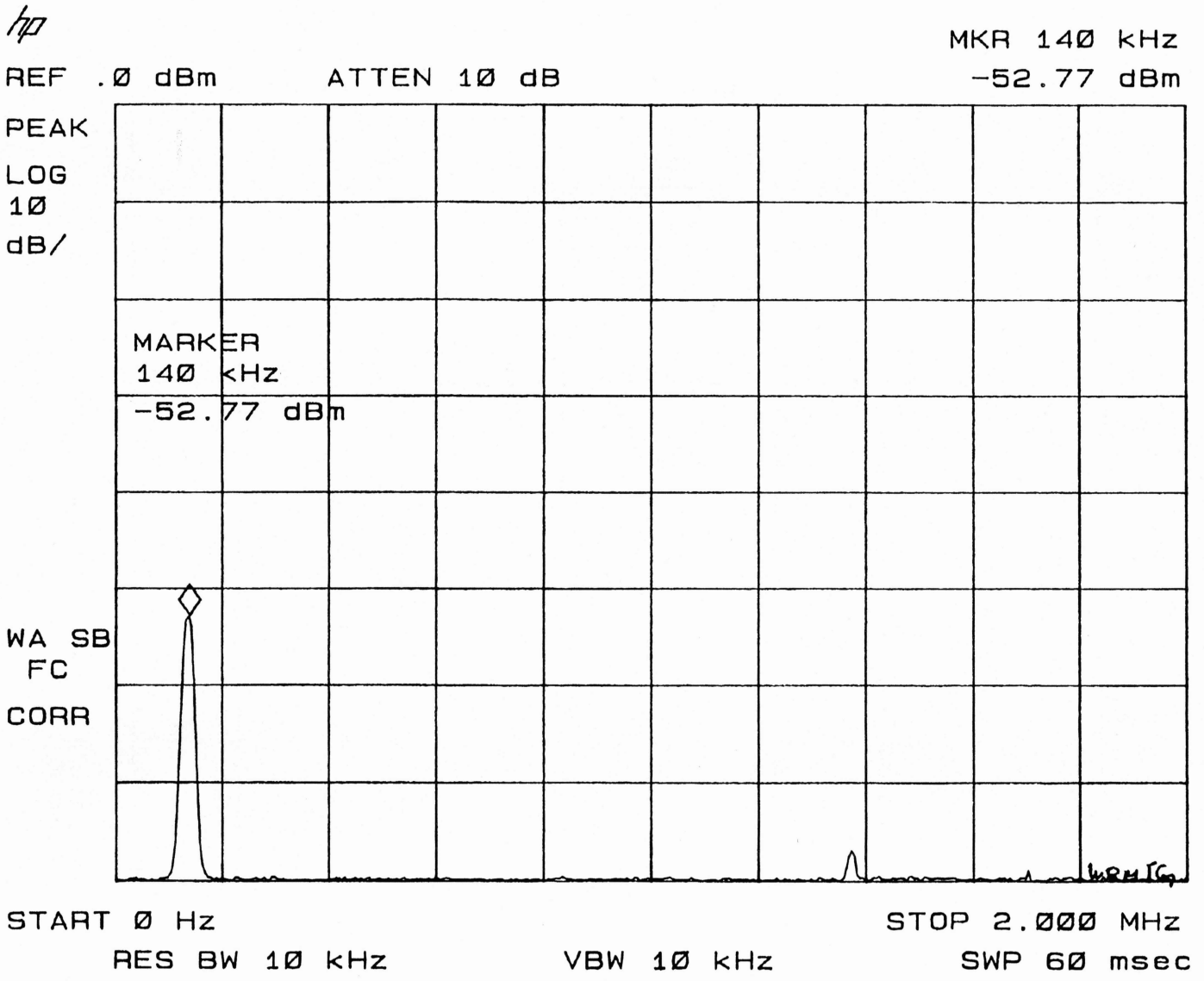
REF .0 dBm
ATTEN 10 dB
MKR 140 kHz
-52.77 dBm
PEAK
LOG
10
dB/
MARKER
140 kHz
-52.77 dBm
WA SB
FC
CORR
START 0 Hz
STOP 2.000 MHz
RES BW 10 kHz
VBW 10 kHz
SWP 60 msec

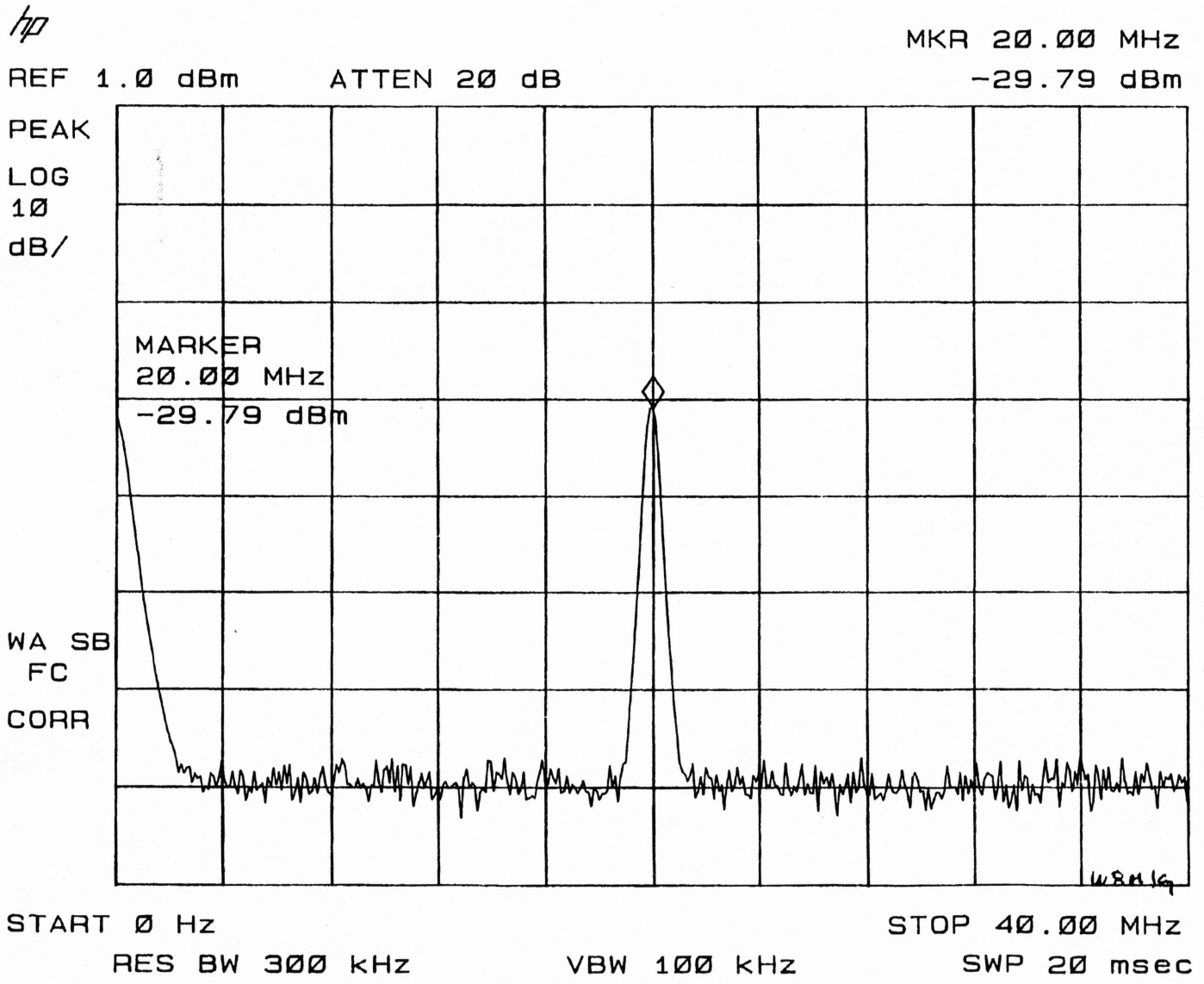
hp
MKR 20.00 MHz
REF 1.0 dBm
ATTEN 20 dB
-29.79 dBm
PEAK
LOG
10
dB/
MARKER
20.00 MHz
-29.79 dBm
WA SB
FC
CORR
START 0 Hz
STOP 40.00 MHz
RES BW 300 kHz
VBW 100 kHz
SWP 20 msec

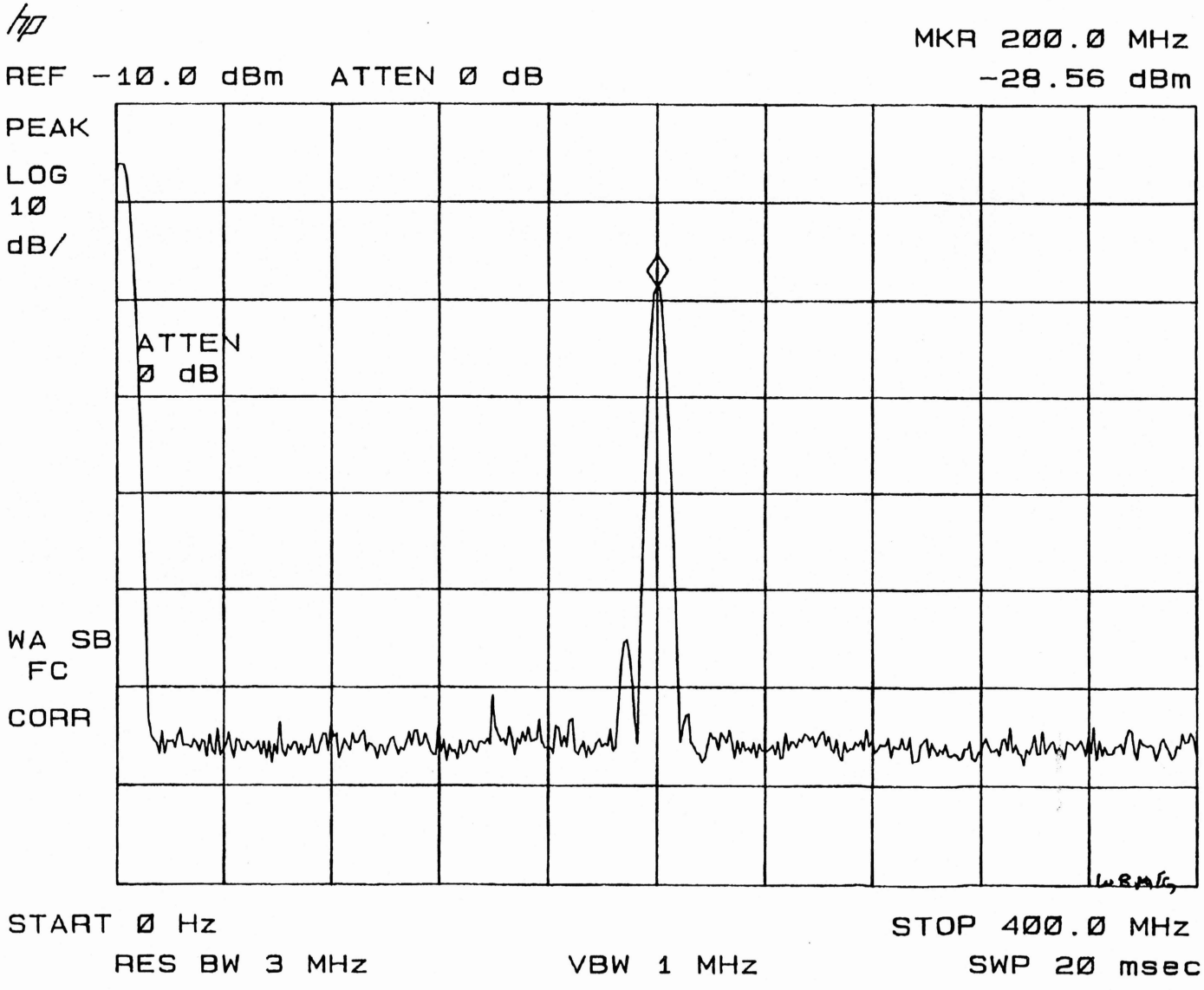
MKR 200.0 MHz
REF -10.0 dBm ATTEN 0 dB
-28.56 dBm
PEAK
LOG
10
dB/
ATTEN
0 dB
WA SB
FC
CORR
START 0 Hz
STOP 400.0 MHz
RES BW 3 MHz
VBW 1 MHz
SWP 20 msec

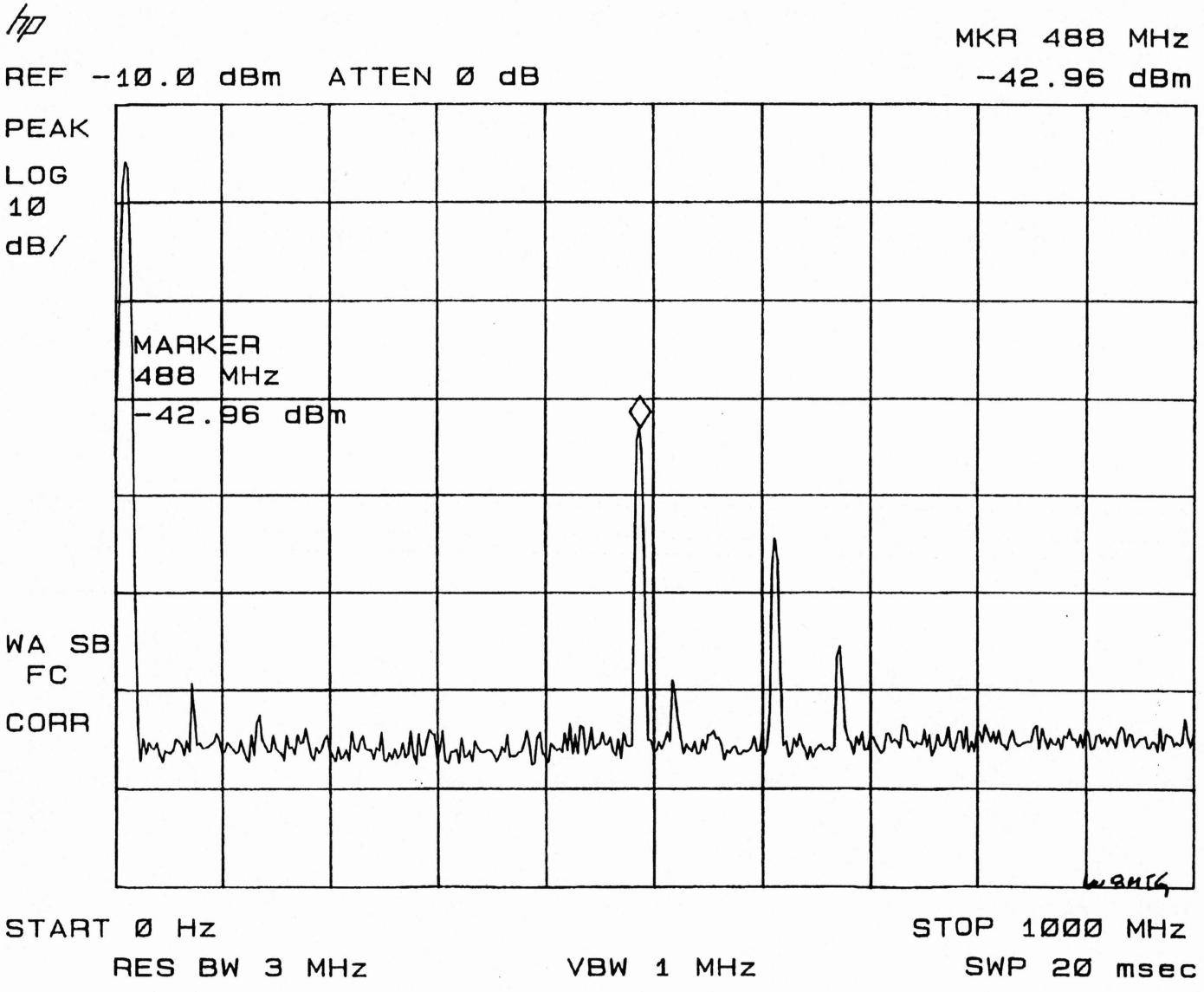
REF -10.0 dBm
ATTEN 0 dB
MKR 488 MHz
-42.96 dBm
PEAK
LOG
10
dB/
MARKER
488 MHz
-42.96 dBm
WA SB
FC
CORR
START 0 Hz
STOP 1000 MHz
RES BW 3 MHz
VBW 1 MHz
SWP 20 msec

BOB YEREB **USER FEEDBACK**

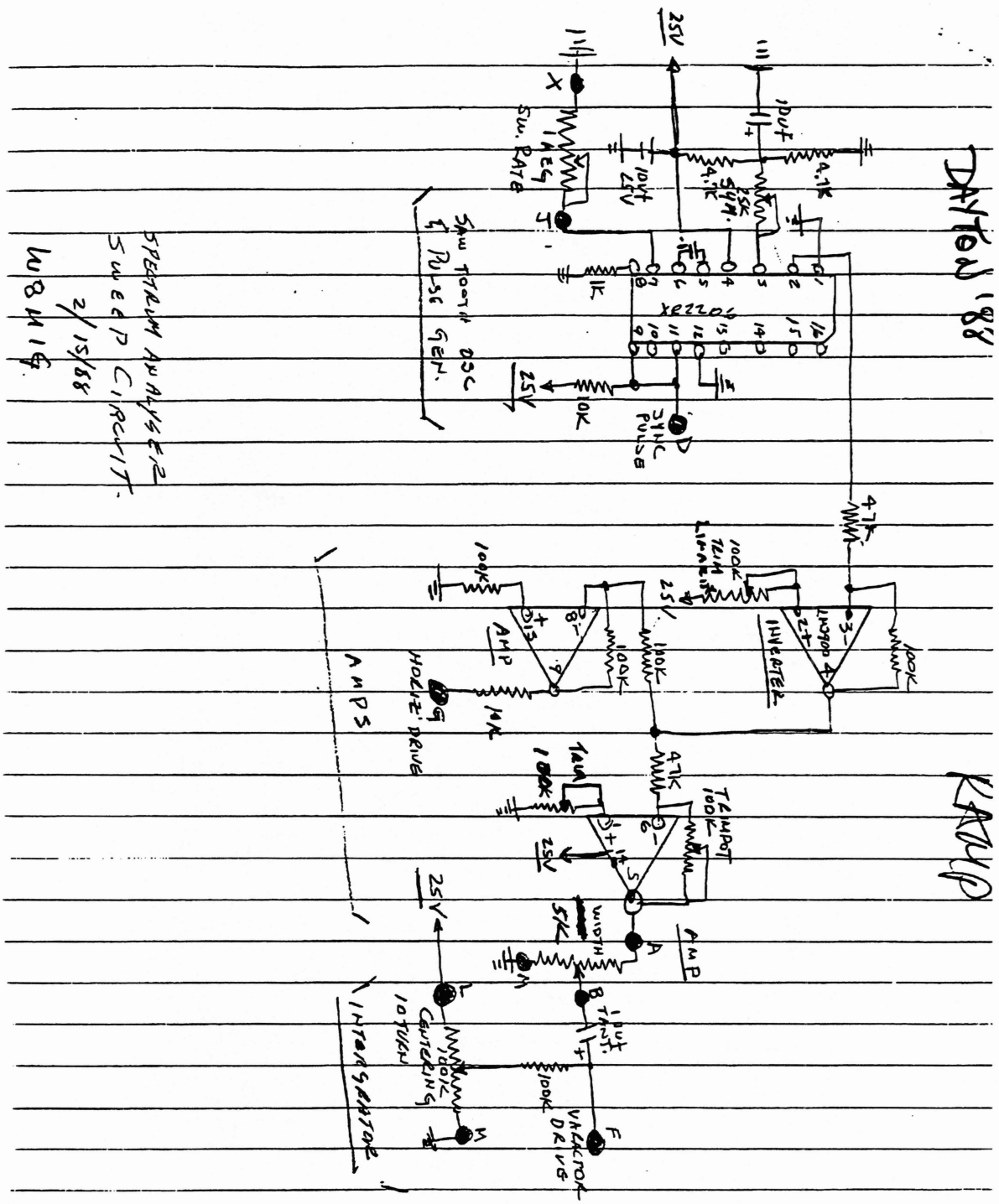

CHARLES POWELL USER FEEDBACK

July 21, 1988

Murray Barlowe
Science Workshop
Box 310
Bethpage, NY 11714

Murray,

I thought I would drop you a note and sketch to confirm the modification I made to the SW-6007 when used with a 0-1 volt panel meter. As I told you, when I connected the voltage divider between TP3 and TP4, there was a linearity problem. The problem proved to be an impedance problem. The voltage divider was loading the circuit and causing the offset voltage at TP4 to shift as the analyzer was tuned up and down in center frequency. I determined that what was needed was a very high impedance so I thought of using a couple of unity gain voltage followers between TP3 and TP4 and the voltage divider. This would look very much like the inputs of a modern DVM to TP3 and TP4. I made the voltage followers using two of the unused op-amps of IC U4 (LM324). This modification allowed the interfacing without loading problems and without the addition of parts.

Attached is a sketch of the of my exact modifications and circuit configuration.

These modifications made the linearity problem totally disappeared. I used a 200k pot for my voltage divider because it was easier to mount in my installation than a couple of resistors but resistors should work just as well and value should not be too critical. This modification could also be of help, even if a voltage divider is not necessary, when the input impedance of the meter used is too low. In fact, the voltages out of pins 8 and 14 are exact replicas of the voltages present at TP3 and TP4 so it could be used on all applications, even though it may not be necessary, should you choose to modify the board on future revisions.

Thanks for a fine kit. I built my analyzer from an old Heathkit scope and it is working great. I had no difficulty with any other parts and it went together great. There were a few minor spurs to clean up by the addition of a couple of ferrite beads and re-routing of a couple of inter-connections but all in all I was very pleased. Just thought I would share my experience and this modification as it may be of assistance to others. Thanks again. 73.

Charlie Powell N5LMS

N5LMS
CHARLES L. POWELL
RT 3 BOX 227
HALLSVILLE, TX. 7565[illegible]

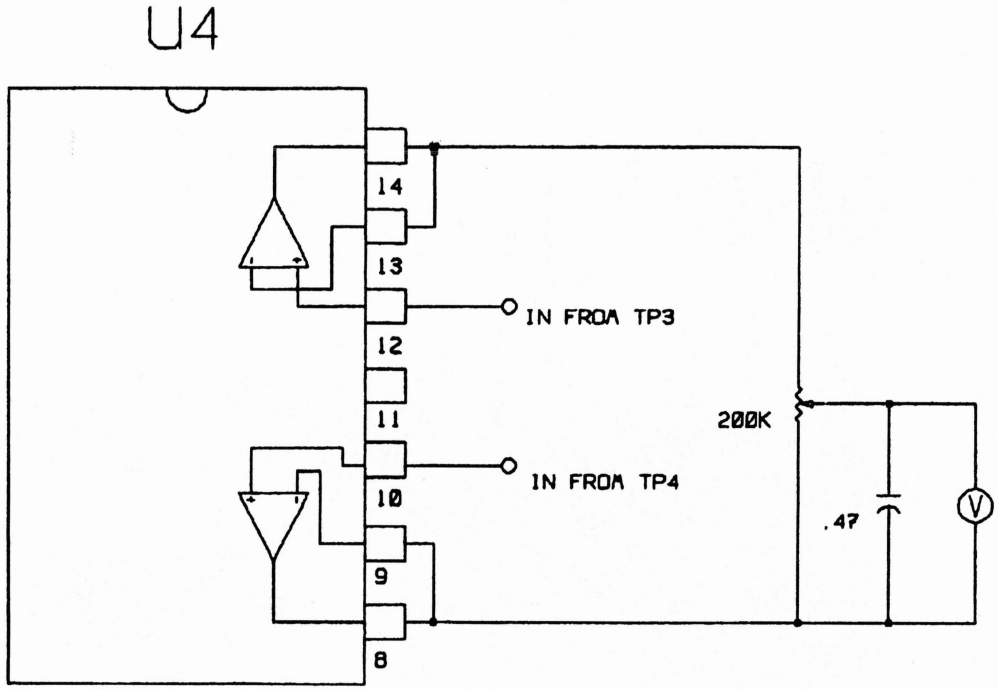

VOLTAGE FOLLOWER ADDITION TO SW-6007 TO SOLVE LOADING DUE TO VOLTAGE DIVIDER.

C. POWELL N5LMS
JULY 21, 1989

EDWARD D. ROSS USER FEEDBACK

P.O. Box 799
Larnaca
CYPRUS

16.1.92

Science Workshop
Box 310
Bethpage, NY 11714
USA

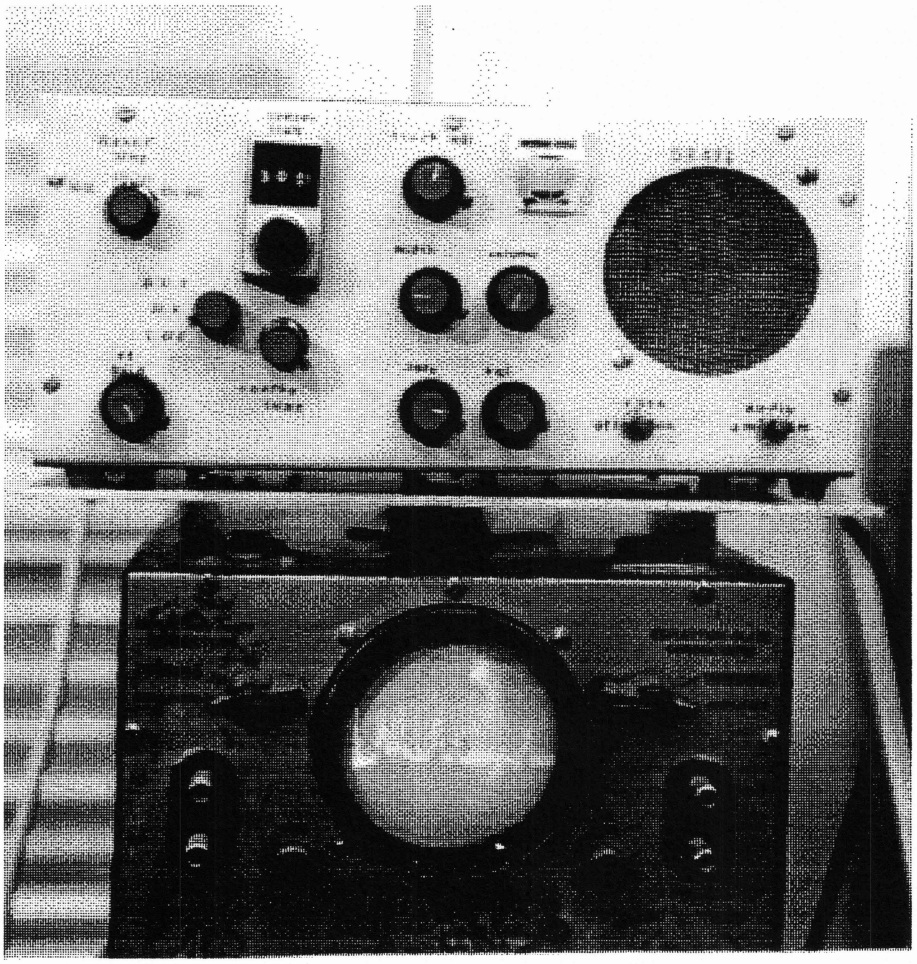

Dear Murray,

Received your letter about impending publication of a book, which I am sure will be well received.

Afraid that there is not much more that I can add because after I finished the unit as shown in the pix, all I did was add on the "Center Frequency Readout Kit" as a "bolt-on". Everything works fine & have been meaning to completely rehouse everything in one cabinet, but..... Incidentally, all the metal work is of my own making.

The reason that I sent you the Pix was that I was so pleased about having made a kit, as advanced as yours, & having it work up to specs. Am enclosing a phoyocopy of a letter from you, which might jog your memory. Wish you success in you venture into publishing.

Yours sincerely,
Ted
Edward D. Ross/5B4OG

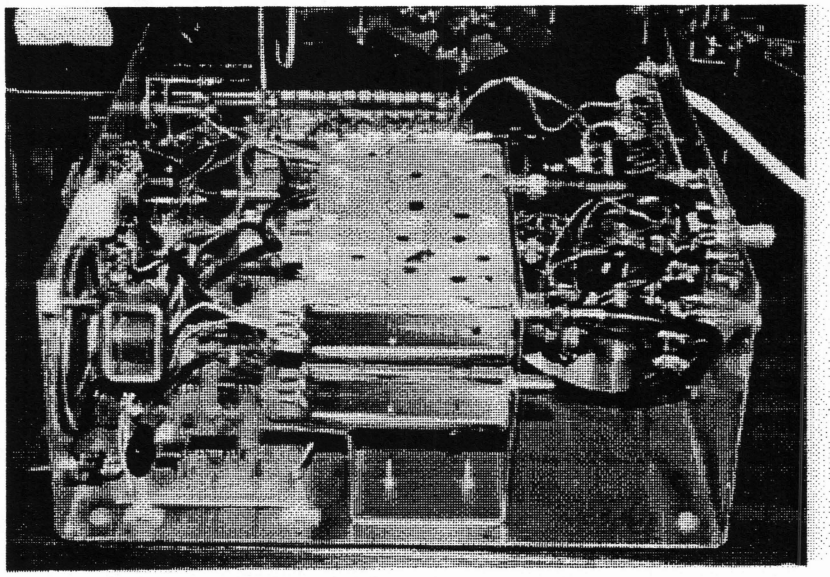

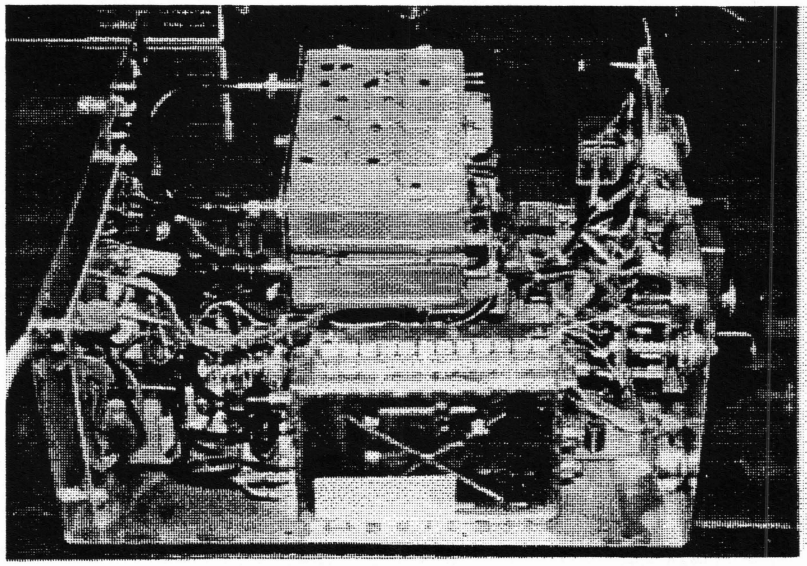

RONALD REES USER FEEDBACK

Mr. Rees has done a great job of documenting the construction of his version of the "Poor Man's Spectrum Analyzer". I think we can all benifit from his ideas in packaging. He tells me has written a program for his Macintosh Computer to remotely control the Scope via RS232 and dump a copy of the captured display to the Mac., and then print a copy of it! He can be reached at R^2 Industries Inc., 4889 S. Flajole Rd., Midland, MI 48640.

Phone (517) 496-3043.

Spectrum Analyzer Layout

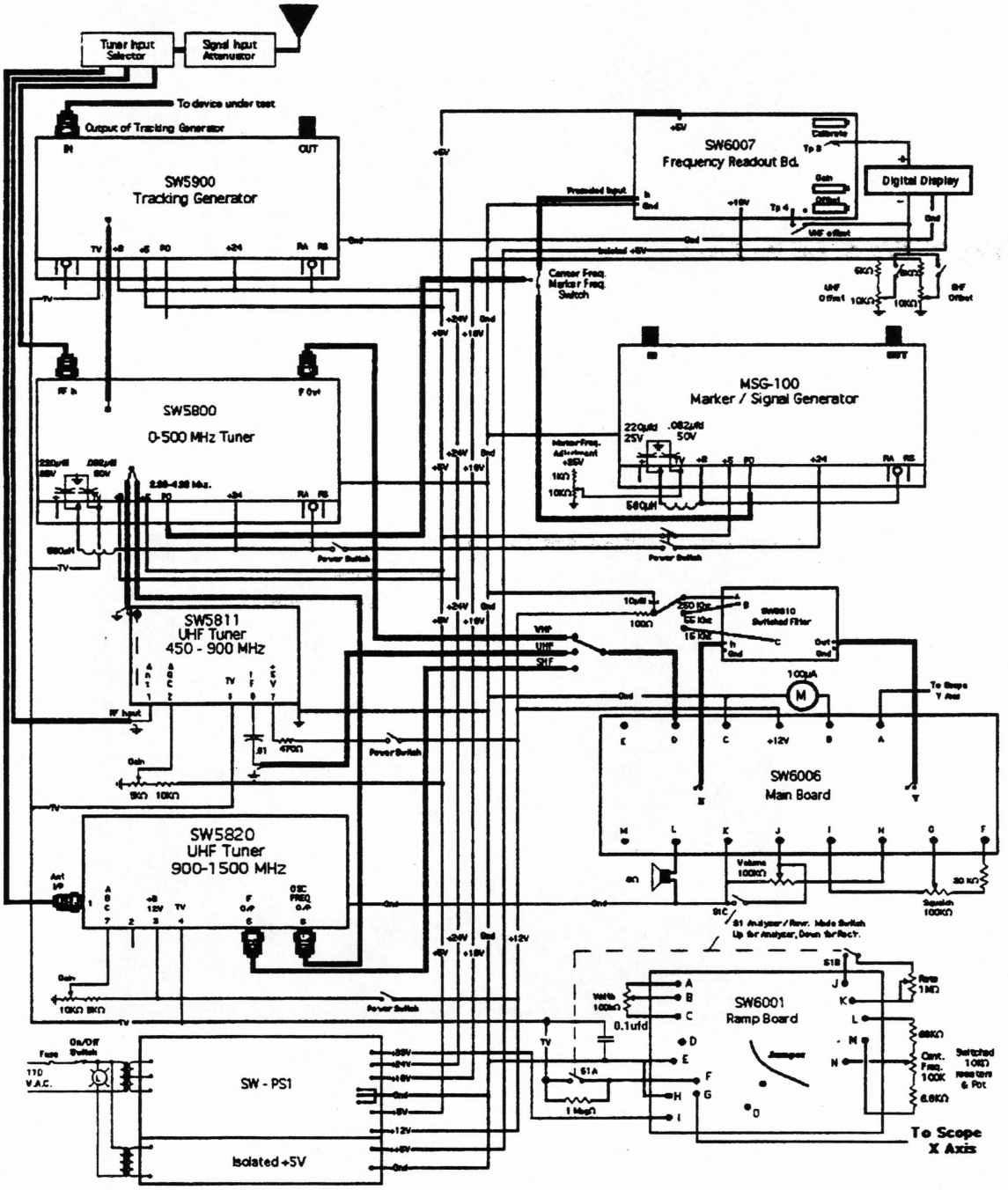

Spectrum Anal

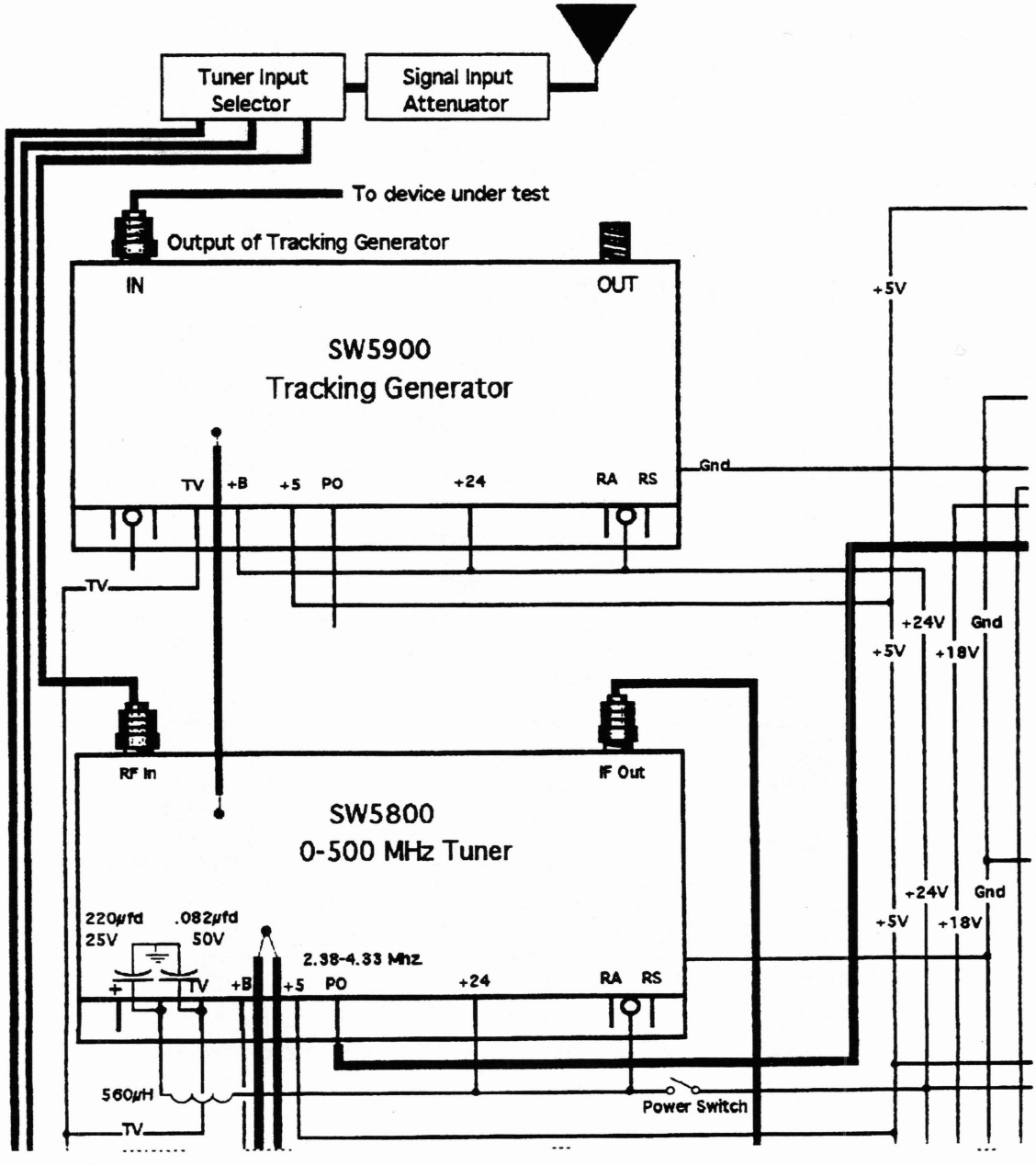

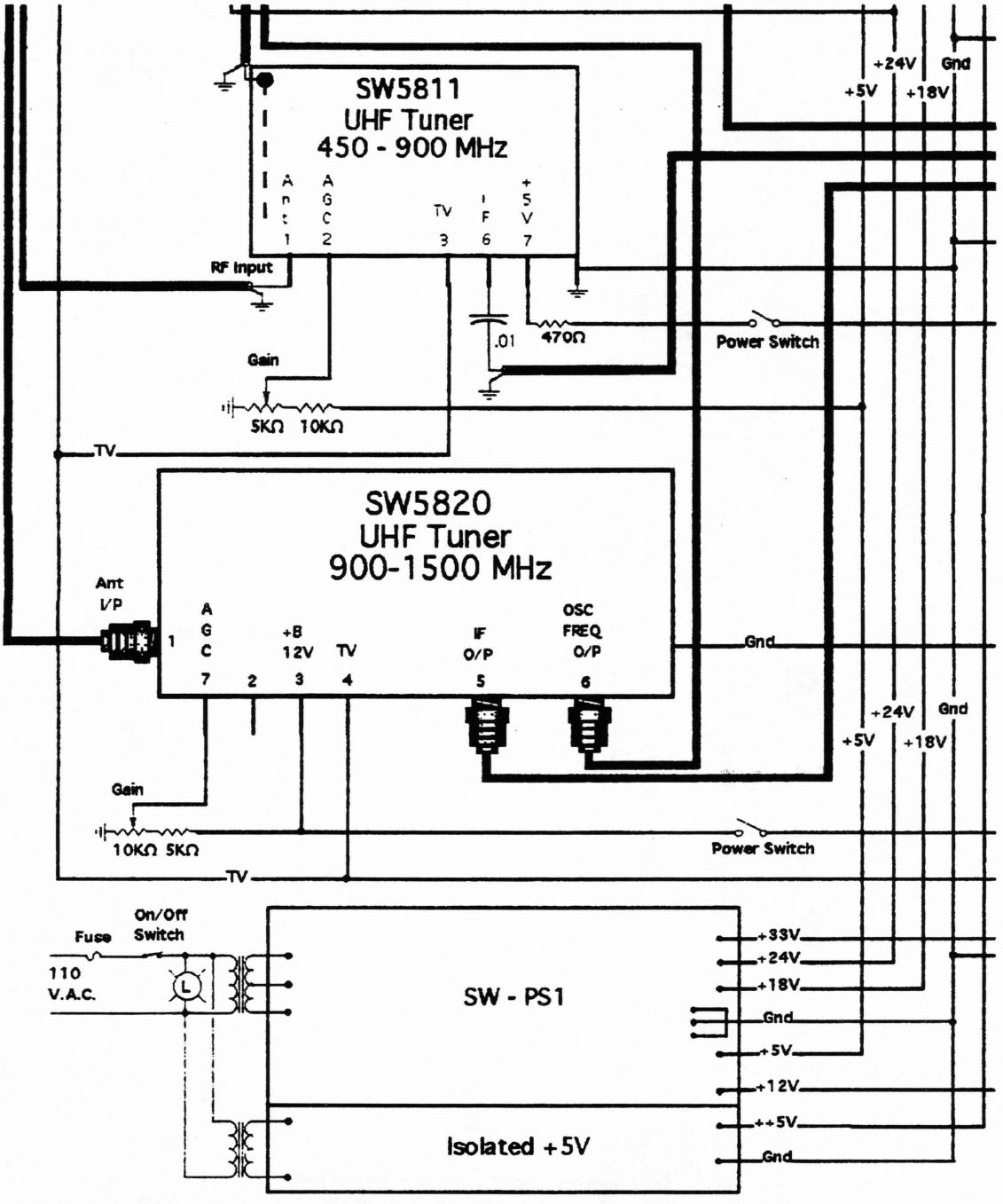
SW5811
UHF Tuner
450 - 900 MHz
Ant
1
AGC
2
TV
3
IF
6
+5V
7
RF Input
.01
470Ω
Power Switch
Gain
5KΩ 10KΩ
TV
+24V
Gnd
+5V
+18V
SW5820
UHF Tuner
900-1500 MHz
Ant I/P
AGC
7
1
2
+B 12V
3
TV
4
IF O/P
5
OSC FREQ O/P
6
Gnd
Gain
10KΩ 5KΩ
Power Switch
TV
+24V
Gnd
+5V
+18V
Fuse
On/Off Switch
110 V.A.C.
SW - PS1
+33V
+24V
+18V
Gnd
+5V
+12V
++5V
Gnd
Isolated +5V

Upper right.

lyzer Layout

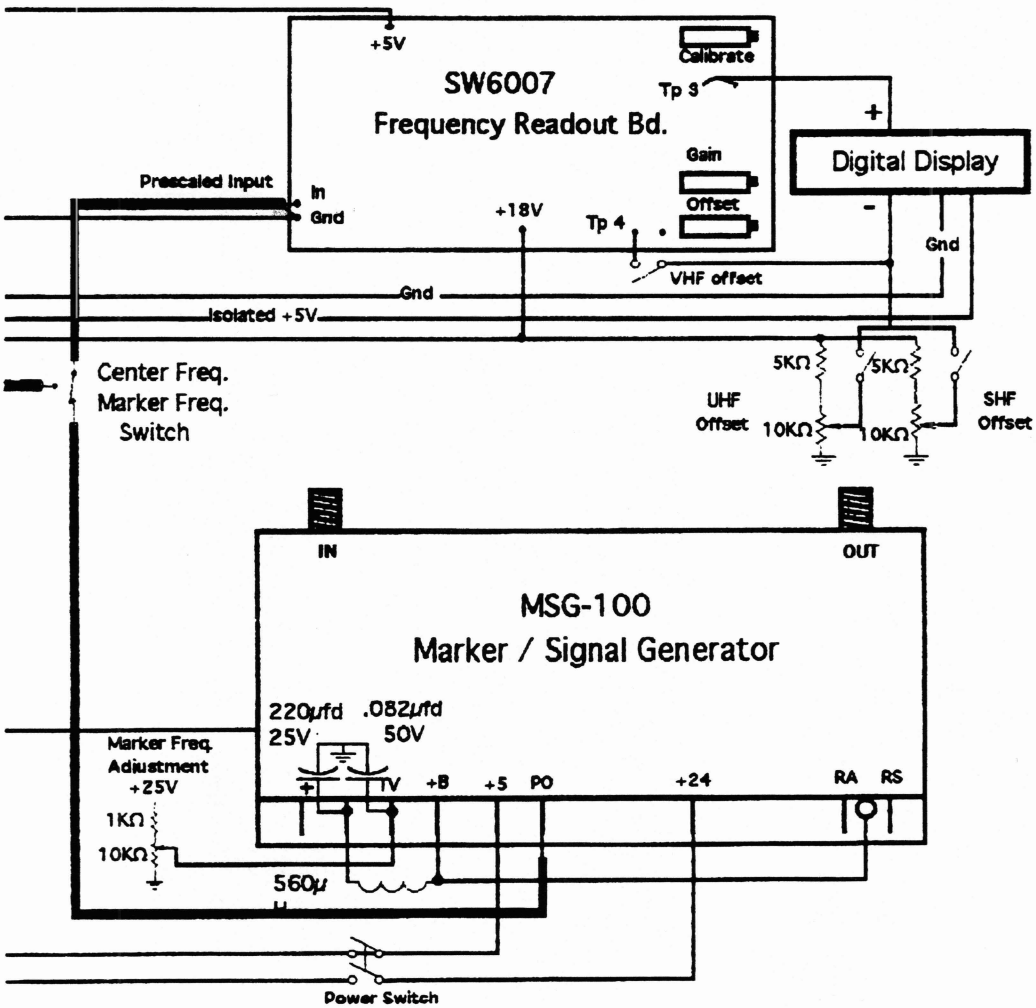

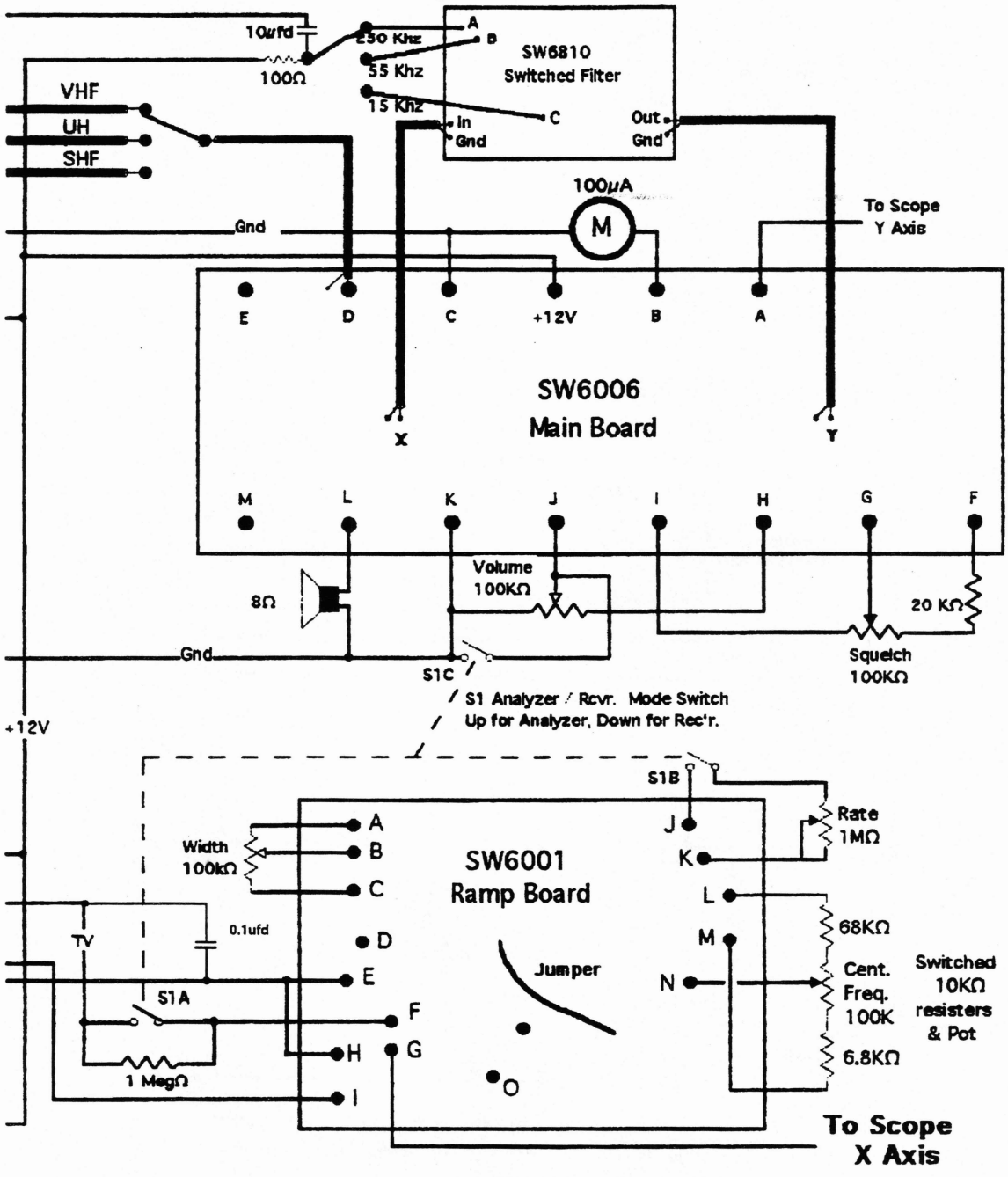
10ufd
100Ω
230 Khz
55 Khz
15 Khz
A
B
C
SW6810
Switched Filter
In
Gnd
Out
Gnd
VHF
UH
SHF
100µA
M
To Scope
Y Axis
Gnd
E
D
C
+12V
B
A
SW6006
Main Board
X
Y
M
L
K
J
I
H
G
F
Volume
100KΩ
8Ω
20 KΩ
Gnd
Squelch
100KΩ
S1C
S1 Analyzer / Rcvr. Mode Switch
Up for Analyzer, Down for Rec'r.
+12V
S1B
Rate
1MΩ
Width
100kΩ
A
B
C
SW6001
Ramp Board
J
K
L
M
N
68KΩ
Cent.
Freq.
100K
6.8KΩ
Switched
10KΩ
resisters
& Pot
TV
0.1ufd
D
E
F
G
H
I
S1A
1 MegΩ
Jumper
O
To Scope
X Axis

Analyzer Packaging

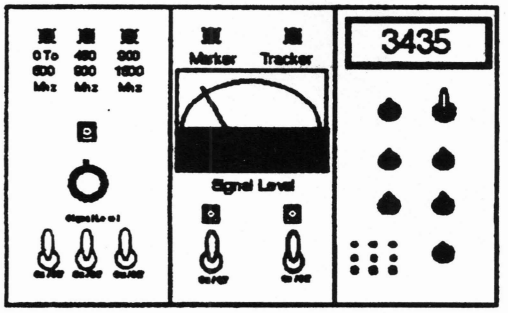

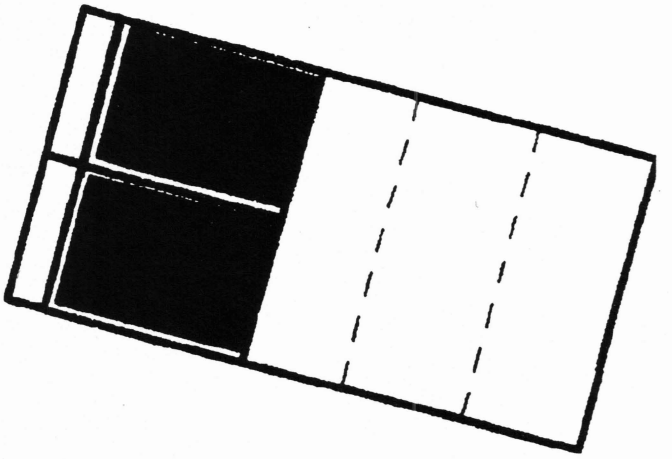

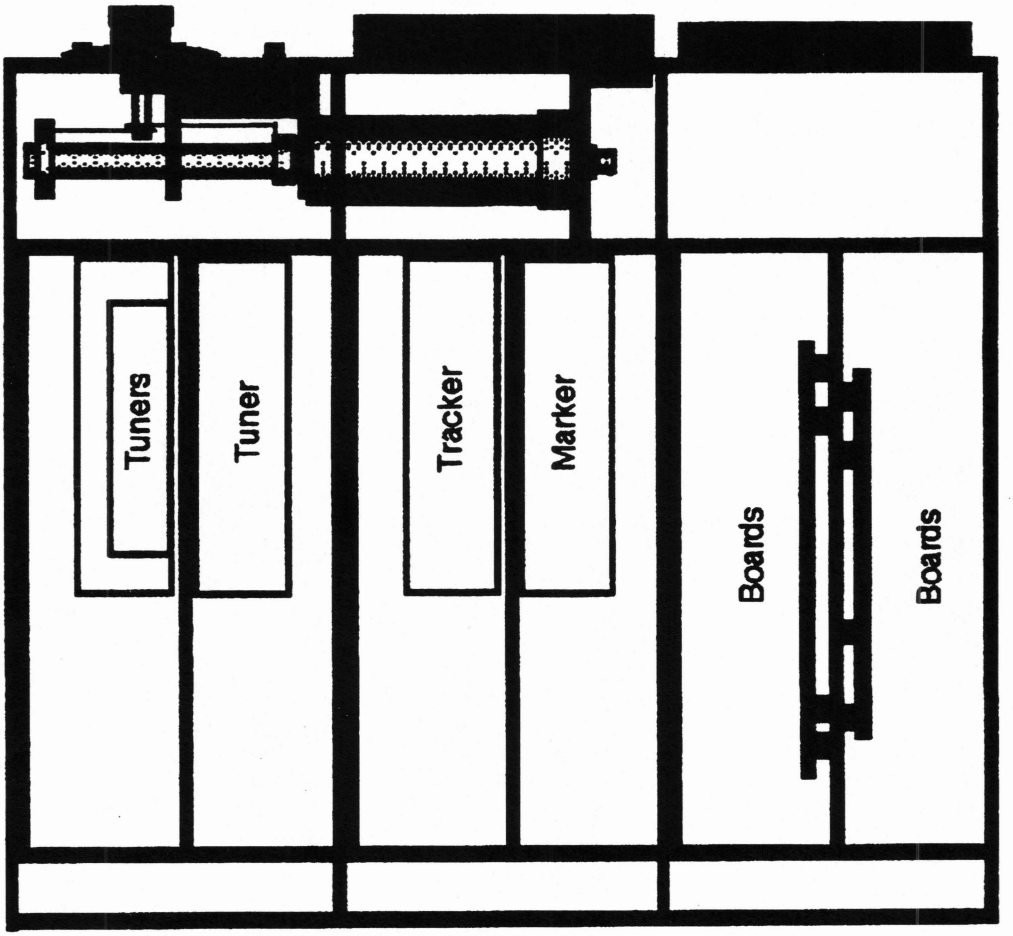

P.C. Board Material Construction

Analyzer Frontpanel Layout

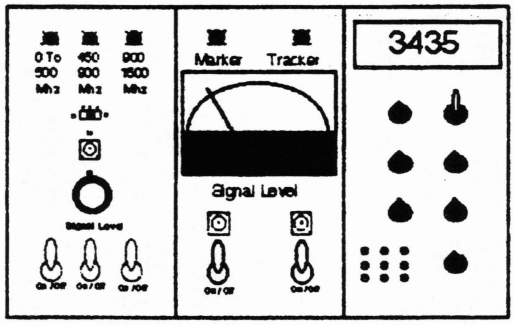

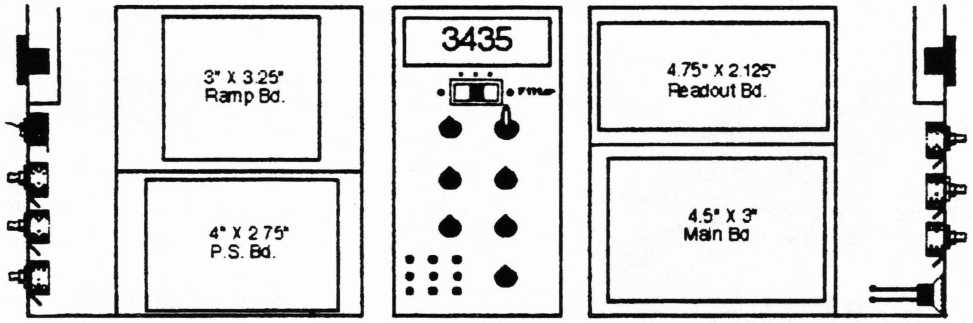

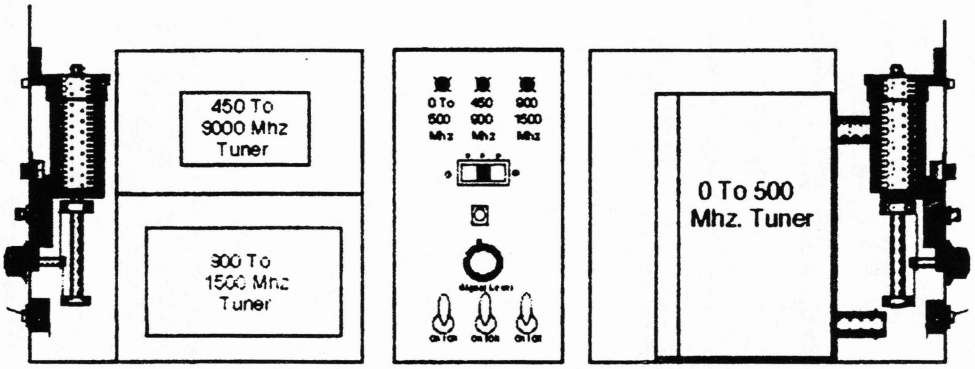

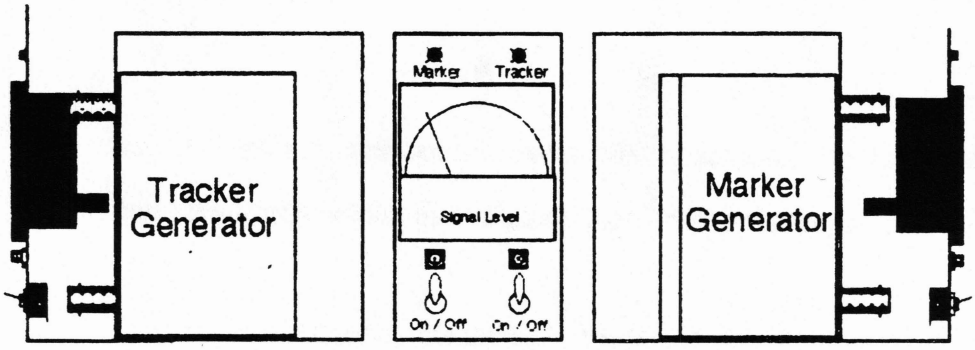

RONALD REES USER FEEDBACK

In one of my notes, I suggested an alternative to the 10 turn Center Frequency Control. It consists of a series string of 10 resistors mounted on a double pole, 10 position rotary switch connected to the ramp board terminals that the Center Frequency Control had been connected to. This would divide the total available tuning voltage into 10 parts. Then the Center Frequency Control would be connected across the two poles of the switch so that only 1/10th of the voltage was across the control. The switch now acts as a "coarse" tuning control, and the variable control acts as a "fine tuning" control. It was difficult to describe. Mr. Rees used his computer to prove that a picture is worth a thousand words.

Another advantage of this arrangement is the ability to choose values of resistance that would provide equal increments of "frequency", rather than "voltage", so that we could compensate for the non-linearity in the "voltage vs frequency" characteristic of the tuner's varactor diode.

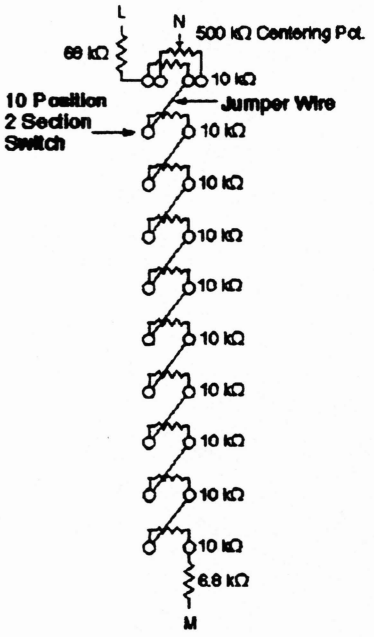

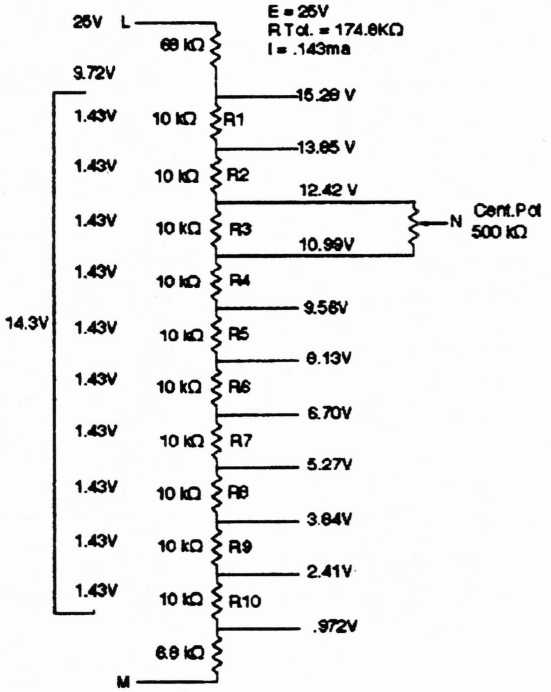

RICHARD KENNEDY USER FEEDBACK

Richard Kennedy (WA5QCP) makes some changes to improve the operation of the Ramp Board. (Some of these changes have already been incorporated into the current version of the Ramp Board.) He also proposes a clever scheme to monitor activity on one or more parts of the spectrum, combining a little digital with the analyzer's analog cicuitry.

March 4, 1987

Dear Murray,

I have built the Science Workshop "Poor Man's Spectrum Analyzer/Receiver". Everything worked well after a re-design of the varactor drive area of the SW-6001 Ramp Board. As originally built, the output voltage varied from about 10 volts to about 20 volts, thus restricting the tuning range. Also, about 3 turns on the 10-turn pot resulted in no change in the output (A4 saturated).

To produce the desired tuning range, the following changes were made:

1.) R11 was eliminated (replaced by a jumper).

2.) R10 was changed to 100K ohms.

3.) Based on maximum ratings for the LM-3900, the applied voltage was raised to 30 volts from an external LM-317 regulator.

4.) The circuit foil was removed between the + end of C4 and the hole about 1/4" toward the LM-3900.

5.) Capacitors C1 and C4 were replaced with 35 volt units.

6.) Capacitor C6 was replaced with a 100uF, 50 volt unit.

These changes resulted in an output to the varactors that varied from about 0.2 volts to 29.5 volts over the full 10 turns of the 100K ohm center frequency pot.

It was then found that the sweep width varied from zero, to full output over about 1/3 of it's rotation. A change here consisted of:

1.) R2 was changed to 100K ohms.

2.) An additional resistor, value 39K ohms, was added between hole A on the board and the 50K ohm width pot. I called it R20.

With these changes, the tuning range using the modified cable tuner was essentially 0 to 500 MHz. With the center frequency pot at mid-range and the sweep width pot at maximum, the output to the varactors just clipped at top and bottom.

I am interested in your tracking generator when it is available.

Sincerely,

Richard L. Kennedy
WA5QCP
5633 Hemmingway
El Paso, Texas 79924

RICHARD KENNEDY USER FEEDBACK

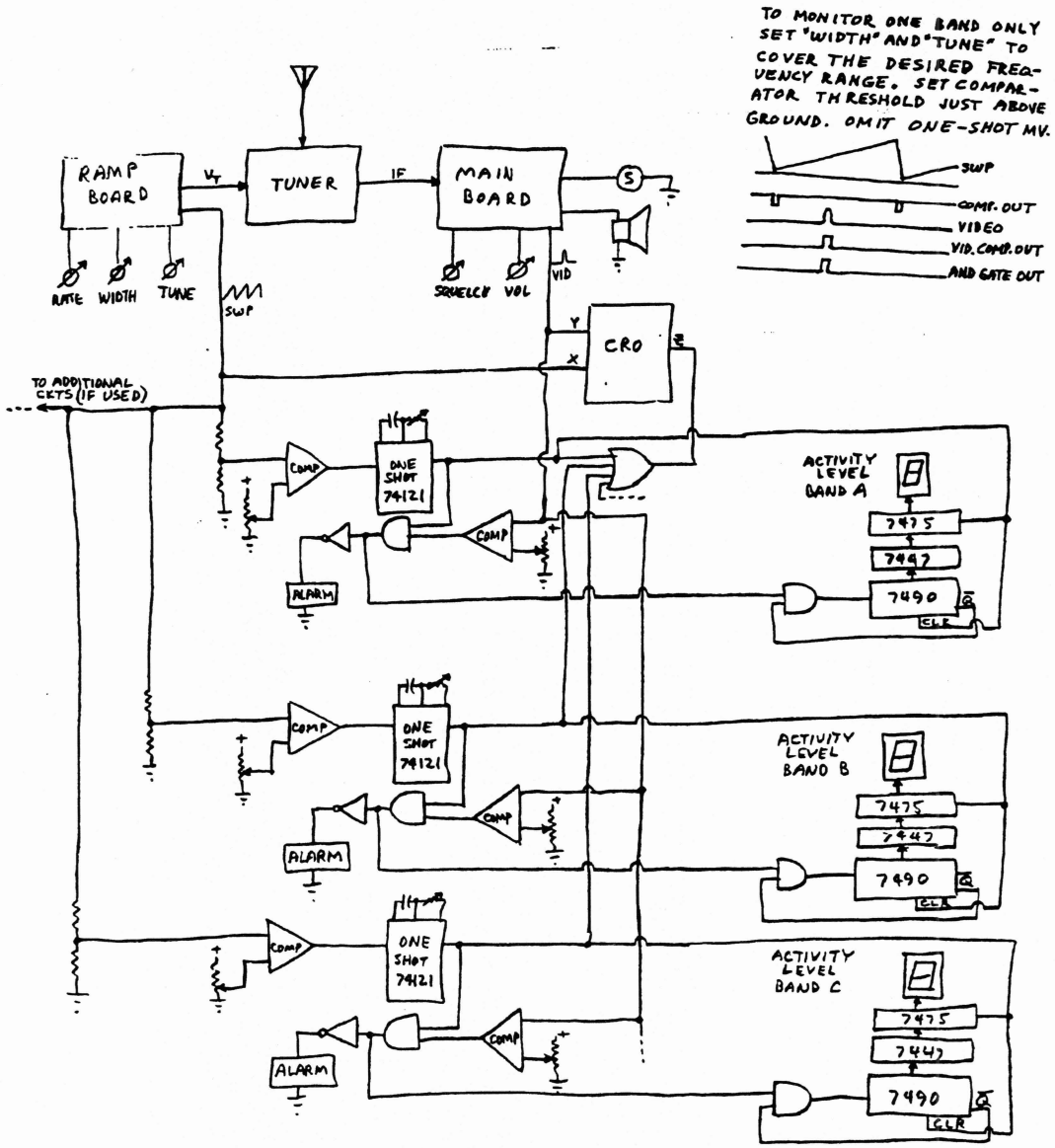

IDEA FOR VHF/UHF BAND MONITOR:
(50 - 144 - 220 - 432 - 902 MHz)

CHAPTER FIVE

Instruction Sheets

Copies of the instructions, schematics and parts layouts for each of the modules.

ASSEMBLING YOUR SCIENCE WORKSHOP SPECTRUM ANALYZER, MONITOR RECEIVER

This project has grown substantially over the past few years. It started out with 2 modules. We are now up to about 10, with no end in sight! Figure 1 is an attempt to pull everything together. However, it should only represent a starting point, since most of you will have better ideas on how you would like to combine the individual modules for your own application. There is no "best" way. For example, you might want to add a calibrated attenuator ahead of the tuners, another deck on the switches to operate LED's to indicate the selected functions, or to break up the 500MHz range on the center frequency control into 10 equal parts, by using a voltage divider made up of 10 equal value resistors in series, with the center frequency control switched across only one tenth of the voltage, acting as a fine tuning control.

Since any calibration would be performed after the project has been completely assembled, you can select components whose values may not be exactly the same as the ones I've specified. None of the resistor or capacitor values are critical. 20% substitutions are acceptable. This applies especially to the values of the controls. For example, the value of the RF Gain control for the UHF tuner can be any value that doesn't draw excessive current from the B+ supply, since the control is only acting as a voltage divider. Any value over 5K should work well. The same thing applies to most of the other controls. Try what you have in your "junk box" before you go out to buy a part.

S1 switches between Analyzer and Receiver Modes and inserts a audio noise filter into the "tune" line. The 1 Meg resistor and the .1 Mfd capacitor should be added to the circuit. S2 switches between the 2 or more tuners.

CONSTRUCTION.

1.) The power supply is the logical starting place, since nothing can be checked out without it. Five levels of voltage are required, 30, 24,18, 12 and 5 volts. The 5 and 18 volt levels must be regulated. The supply should be able to deliver 200 ma., or 300 ma. if the tracking generator is added.

Since the sensitivity of this instrument is in the order of microvolts (the same as a modern TV set), it is important that the input of the tuner be protected from strong signals. This means shielding and using attenuators on the input if the analyzer is to be used in a high RF environment. Transmitter output can be checked using an in-line impedance matching pad with a tap, which will feed a small sample of the transmitter's output to the analyzer.
NOTE: You MUST complete the basic analyzer (Main Board, Ramp Board & Tuner) and be sure it is working properly BEFORE you

Science Workshop's "Poor Man's Spectrum Analyzer"

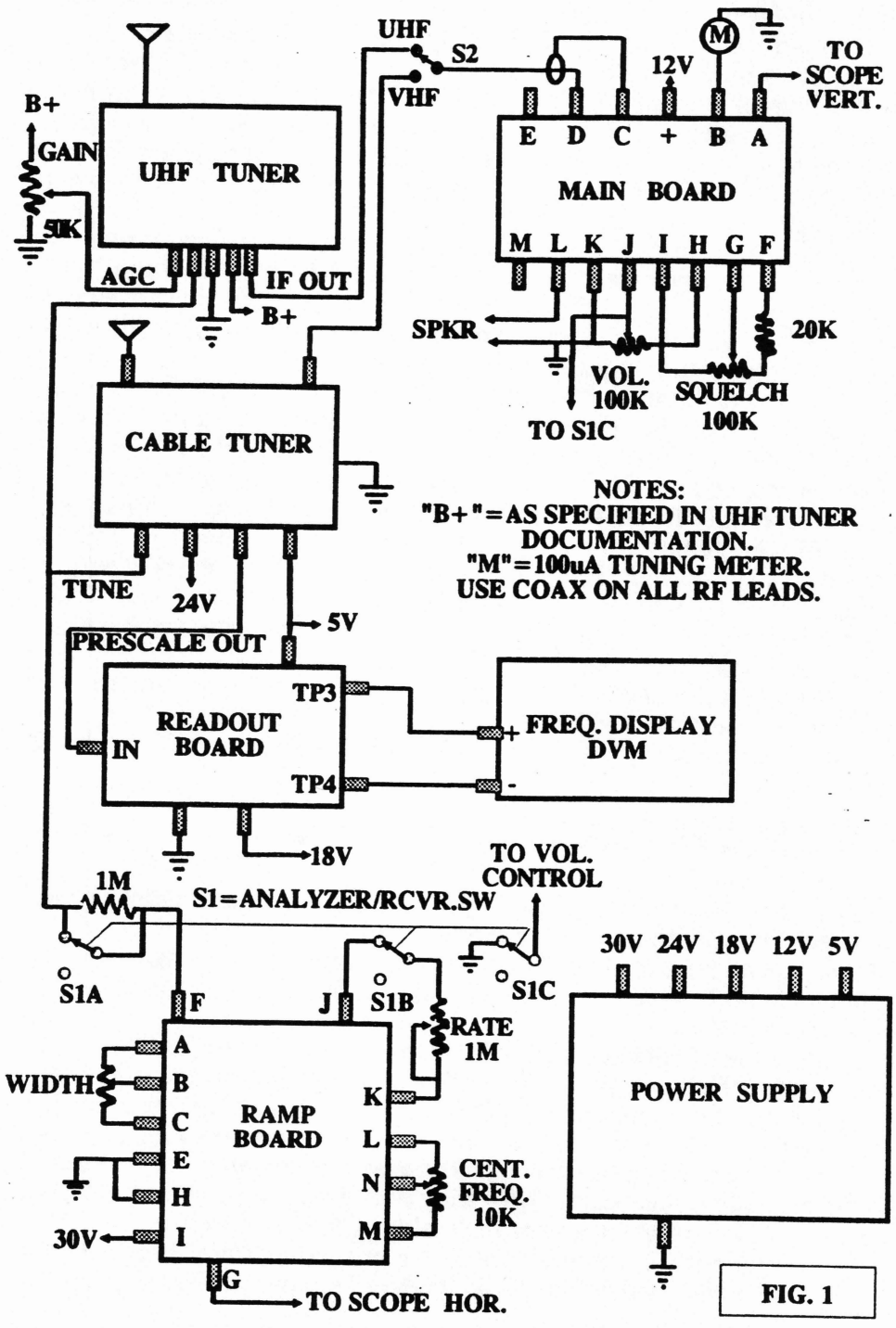

FIG. 1

add any other assemblies!! Checking out each assembly individually, and then interconnected, assures success in the final assembly, plus an understanding of the principles involved.

2.) Testing the tuner and ramp board circuits using a TV set. Wire the Ramp Board circuit and interconnect the power supply, Ramp Board and tuner. Open switch S-1 on the ramp board circuit. This puts the system in the "receive" mode by disabling the ramp generator. Connect the "IF" output of the tuner to the TV's VHF antenna input. Set the TV's tuner to channel 3. The "center frequency" control should now permit operation of the TV with the analyzer's tuner serving as a substitute TV tuner. This test assures us that the tuner, ramp board and power supply are working.

3.) Follow assembly and testing instructions packed with the Main Board, UHF Tuners, Digital Readout Board and Tracking Generator, etc.

MAIN BOARD (SW-6006) ASSEMBLY INSTRUCTIONS

(Refer to board drawing and parts list on page 4.)

1.) Install 2 jumpers as indicated. **2.)** Install 9 resistors in locations indicated. **3.)** Install 15 capacitors as indicated. (Observe polarity of C6 and C7). **4.)** Install FL1 and FL2. These 3-lead devices are symmetrical and can be installed either way. **5.)** Install 5 inductors (L1 thru L5) as indicated. Leads may have to be bent slightly to line up with the hole patterns. L5 is symmetrical, so it may be installed either way. L2 is a two hole balun. Install with twisted lead towards IC1. **6.)** If you haven't had much experience working with IC's, install sockets for the 3 chips. They have all been tested before being shipped. Handle them carefully! Install them in the locations indicated. The "1" indicates the location of pin #1.

7.) Check your work carefully for excess solder, splashes, shorts or "cold" solder joints. This completes the assembly of the Main Board.

MAIN BOARD TEST AND ALIGNMENT PROCEDURE

(Note: The Tuner and Ramp Board should have been interconnected and tested before the following steps are performed.) **1.)** Lubricate the cores of L1 and L4 with a drop or two of WD-40 (or equivalent) before attempting any adjustments. These Hi-Frequency ferrite cores are EXTREMELY BRITTLE. Lack of lubrication and/or the use of a metal tool almost guaranties their destruction! A nylon, or other plastic tool matched to the dimensions of the slot must be used. **2.)** Install jumper (or 100 uA meter) from "B" to ground. **3.)** Connect scope vertical input between "A" and ground. **4.)** Connect "C" and "D" to IF output of Tuner. **5.)** Connect a ground lead between the Tuner, the Ramp Board (E) and the Main Board (K). **6.)** Connect a 12 volt supply between "+" and ground. (Board should draw approximately 35 mA.)

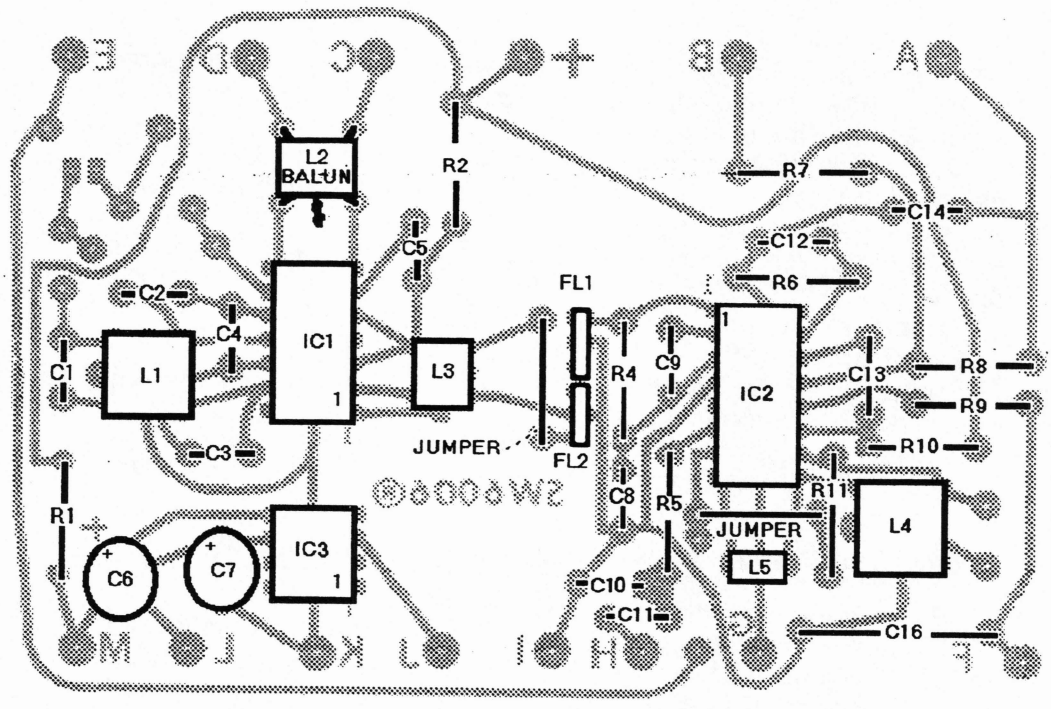

CAPACITORS	RESISTORS	INDUCTORS
C1 3.3pf	R1 120	L1 Red
C2 16pf**	R2 120	L2 Balun
C3 16pf**	R3 none	L3 Black
C4 33pf	R4 330	L4 Green
C5 .02mfd	R5 3k	L5 22μH
C6 100mfd	R6 10k	Colors refer to rings around
C7 100mfd	R7 33k	cores.
C8 .02mfd	R8 3k	
C9 .02mfd	R9 560	
C10 .01mfd	R10 120	
C11 .1mfd	R11 10k	FILTERS
C12 .01mfd	R12* 20k	FL1,FL2 10.7MHz
C13 .02mfd	*Added in series with	
C14 .001mfd	squelch control.	
C15 none		
C16 .33mfd		
**Brown silver mica.		

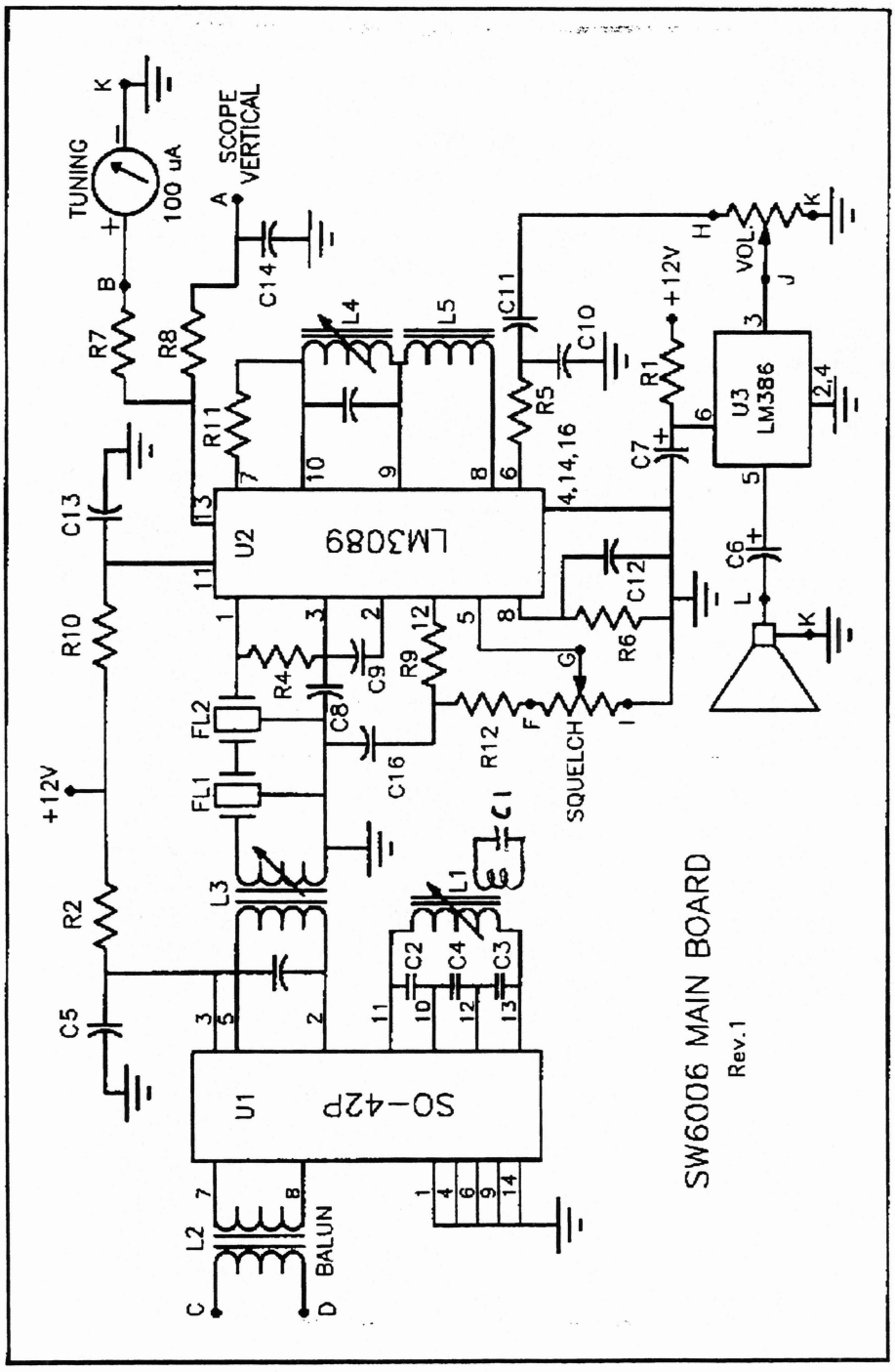
TUNING
100 uA
SCOPE
VERTICAL
LM3089
SO-42P
U1
U2
U3
LM386
SQUELCH
VOL
+12V
BALUN
SW6006 MAIN BOARD
Rev.1

7.) Connect ramp board horizontal sweep output to the horizontal input on scope. Set scope to "external horizontal input".

8.) Pre-set the top of the L1 tuning core even with the top of its shielded housing. (Adjustment of L1 shifts the frequency range). **9.)** Set "width", "rate" and "center frequency" controls to the middle of their range. Adjust vertical sensitivity on scope to display 2 or 3 vertical "pips". This may require re-setting the "width", "rate" and "center frequency" controls. 10.) Tune L3 for maximum amplitude of the "pips".

This completes the "Spectrum Analyzer Mode" alignment. The only remaining adjustment is L4, the sound detector coil in the "Receiver Mode".

11.) Connect the "squelch" and "volume" controls as indicated. **12.)** Connect speaker as indicated. **13.)** Turn off the sweep (open S1 in series with the "rate" control) to disable the Spectrum Analyzer Mode. 14.) Set the "squelch" control to its OFF position (maximum hiss, maximum counter-clock-wise position).

15.) Tune the "center frequency" control to the sound carrier of a strong local TV station. Adjust L4 for maximum sound, along with minimum background noise and distortion.

This completes the final alignment of the Main Circuit Board. If you intend to use the Spectrum Analyzer to check the output of your transmitter (or in any high RF environment), you must: **a).** Install the Main Board in a separate shielded box. **b).** Add feed thru-capacitors and ferrite beads on all power supply leads entering this box. (Add ferrite beads without feed-thru capacitors on the volume control, speaker, squelch, and signal strength meter leads). **c.)** Terminate the transmitter in a proper load and use a SAMPLER to supply the signal to the Analyzer. **d).** Add an RF attenuator at the input to the tuner. **e).** Never apply more than a few hundred MICROVOLTS to the input of the tuner.

Your finished Analyzer/Receiver should provide you with many opportunities to increase your ability to design and troubleshoot complex electronic circuits, as well as many interesting hours of fascinating "RF-Vision" operation. Enjoy!

TYPICAL MAIN BOARD IC VOLTAGES

SO-42P				CA-3089				LM-386			
1	0V.	8	2V.	1	2V.	9	5.4V.	1	1.3V.	5	5.8V.
2	11.7V.	9	0V.	2	2V.	10	5.4V.	2	0V.	6	11.4V.
3	11.7V.	10	1V.	3	2V.	11	9.2V.	3	0V.	7	5.7V.
4	0V	11	11.4V.	4	0V.	12	4.4V.	4	0V.	8	1.3V.
5	11.7V.	12	1V.	5	0/5V.*	13	0.1V.				
6	0V.	13	1.4V	6	4.8V.	14	0V.				
7	2.9V.	14	0V.	7	4.6V	15	4.5V.				
				8	5.4V.	16	0V.				
				*Varies with squelch control settings							

Cushman Electronics publishes an excellent pocket-sized book titled "Using The Spectrum Monitor", Part # 5600-0065, priced at $8.25, including shipping. It's the best book that I've seen on the subject, and it is a real buy. It's loaded with application info, well illustrated and is a "must" for anyone wanting to get the most out of his instrument. Write them at 2144 Bering Dr., San Jose, Calif. 95131. Tell them we sent you.

Rev.2.0

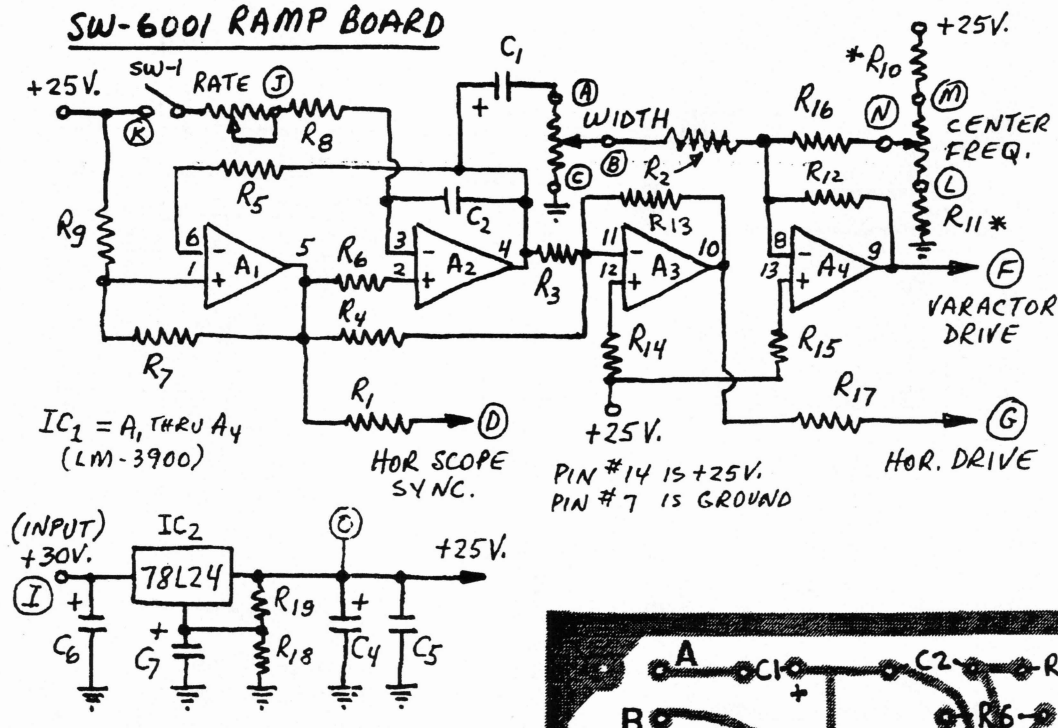

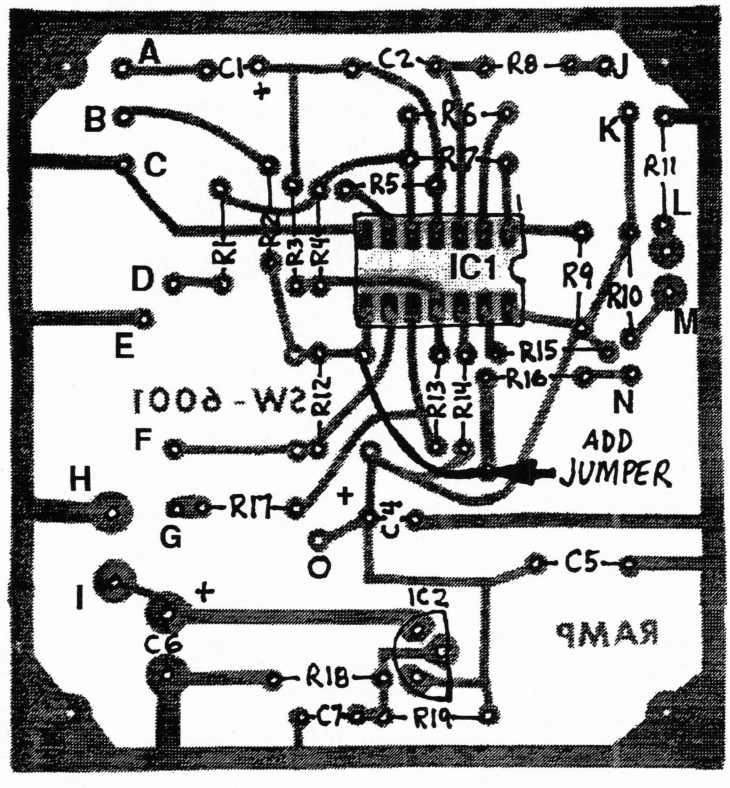

RAMP BOARD PARTS LIST

RESISTORS

R1	10K	R2	68K
R3	330K	R4	330K
R5	33K	R6	10K
R7	47K	R8	47K
R9	1.8Meg.	R10	68K*
R11	6.8K*	R12	330K
R13	330K	R14	470K
R15	330K	R16	100K
R17	10K	R18	
R19	13K		

IC1=LM3900 IC2=78L24

CAPACITORS

C1	10Mfd./16V TANTALUM (OBSERVE POLARITY)			
C2	0.22Mfd.			
C3	(Not used)	C6	470Mfd./35V	**COMPONENT LAYOUT**
C4	10Mfd./25V	C7	68Mfd./10V	
C5	0.22Mfd.	CONTROLS Width=100k, Center Freq.=100k, Rate=1Meg.		

CONNECTING THE SW-5800 MODIFIED CABLE TUNER

This tuner has been modified to extend the lower end of it's frequency coverage from 50 Mhz to approximately 1 or 2 Mhz. In addition, it's 1st and 2nd IF bandwidths have been reduced to make it more useful in our application. Unfortunately, we have never been able to get a copy of it's schematic.

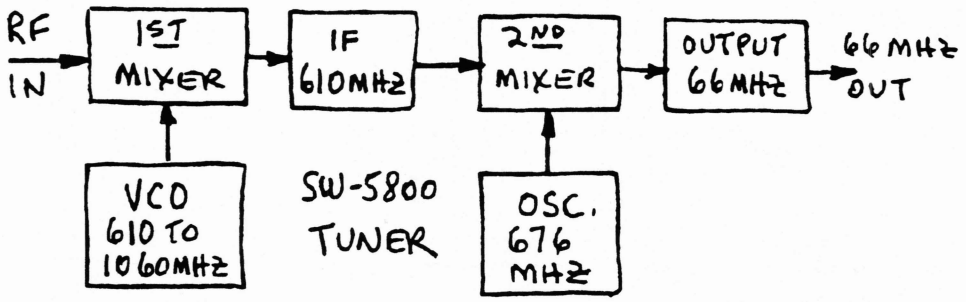

This tuner is a double conversion unit, with a voltage tuned 1st local oscillator and a Surface Acoustic Wave unit stabilizing the 2nd local oscillator. The conversion gain is approximately 4 dB. It contains a pre-scaler that samples the 1st local oscillator and divides it by 256. This output can be used by the SW-6007 Digital Readout Interface Board to provide a continuous display of the center frequency. The front of the tuner has 2 "F" connectors, labeled "IN" and "OUT". "IN" is "RF IN" and "OUT" is "IF OUT". "OUT" should be connected to "C" and "D" on the SW-6006 Main Board with a short length of 75 ohm co-ax. The rear pin marked "TV" for Tune Voltage, should be connected to "F" on the Ramp Board. The "B+" pin should be connected to the 24 volt power supply. A good ground connection should be made between the tuner frame and "E" on the Ramp Board.

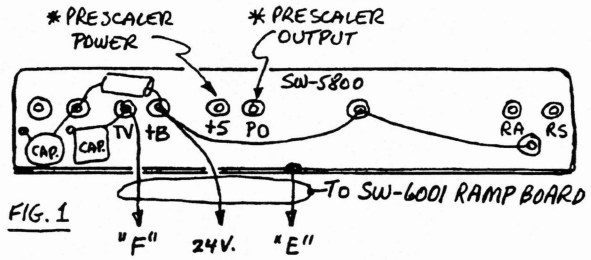

FIG. 1

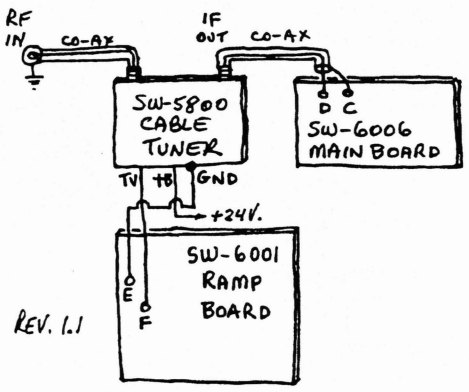

REV. 1.1

ADDING THE SW-5811 UHF VARACTOR TUNER.

This tuner can be used to extend the range of the "Poor Man's Spectrum Analyzer" from approximately 450 to 900MHz.

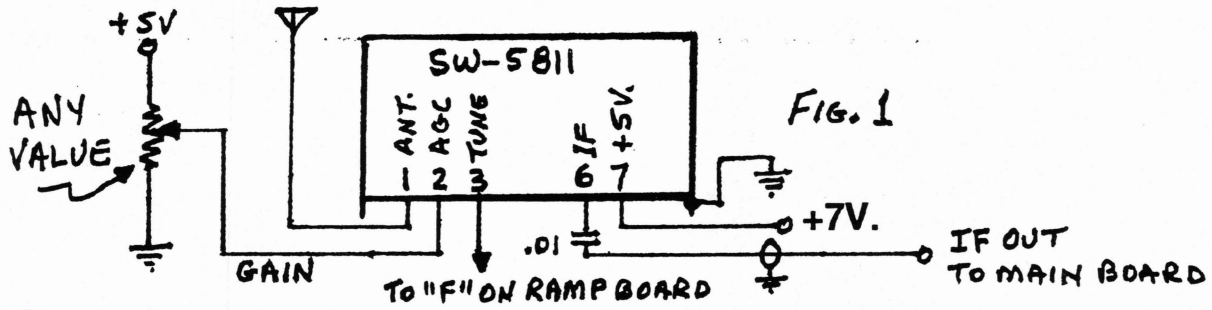

FIG. 1

Fig.1 shows the pin connections for the tuner.

Fig.2 illustrates how the SW-5811 can be added to the SW-5800 tuner to provide coverage from 0 to 900MHz. The SW-5820 can also be added (using a 3 position switch) to further extend the tuning range to 1.5GHz. Note the different B+ voltages for the two tuners. B+ to the tuners should also be switched, turning off the tuner that is not being used to prevent picking up radiation from it's local oscillator.

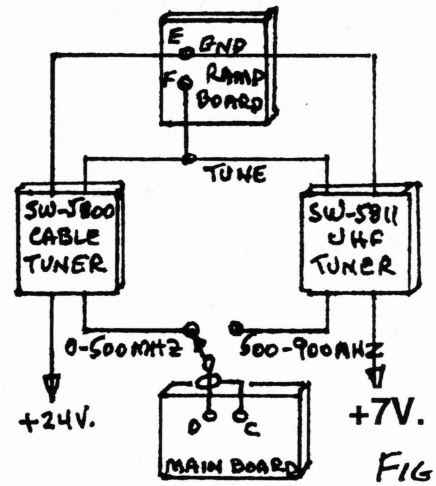

FIG. 2

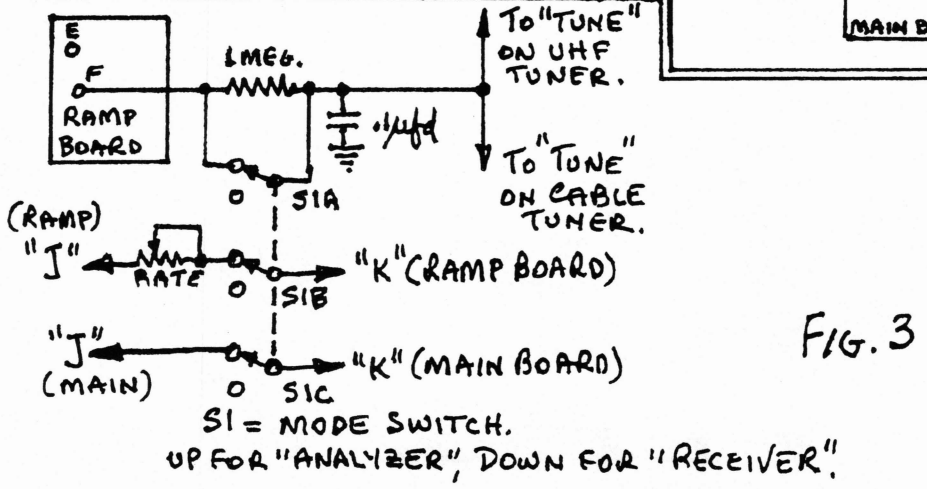

FIG. 3

Fig.3 The modification to improve audio reception in the "Receive" mode should be added between "F" on the Ramp Board and the "Tune" inputs of both tuners, as illustrated. A 3 pole, 2 position "Mode" switch is used to switch between the "Analyzer" and "Receiver" modes.

S1A adds the RC filter in "Receiver" mode.
S1B disables the ramp generator in "Receiver" mode.
S1C disables the audio in the "Analyzer" mode.

REV. 1A

SUBJECT: UHF TUNER MODIFICATION

Question: "Why can't I use the SW-6007 to display the UHF frequencies?"

Answer: Because the UHF tuner doesn't have the VCO pre-amp and pre-scaler that the VHF tuner has. I've been trying to find UHF tuners that do (at reasonable prices), but without success.

The other day it occurred to me that it might be possible to use the pre-amp and pre-scaler in the VHF tuner for both! If I could pick up some of the signal from the VCO in the UHF tuner and feed it into the VHF pre-amp and prescaler, the SW-6007 could process that information and then display it as the UHF center frequency.
It wasn't too long before the soldering iron was hot and I was busy testing my theory. A few hours later, after I had figured out how to sample the UHF VCO signal and the necessary switching, I sat back and watched the Digital Readout display the Center Frequencies on the UHF bands!
I haven't had a chance to make this modification on many of the UHF tuners, but the two tuners that I did modify encouraged me to take the time to document the steps involved so that you too could have the opportunity to experiment.
The positioning of the pickup loop seems to be quite critical, so I can't guarantee the results. However, I'm offering it as a NO CHARGE OPTION for the more adventurous souls.

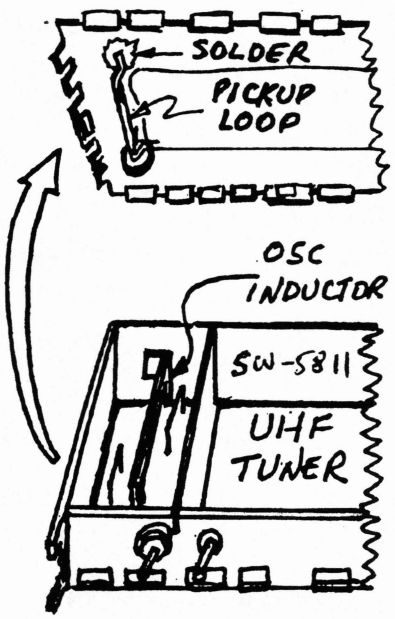

FIG. 1

NOTE: INSTALL A 470Ω, 1/4W. RESISTOR BETWEEN PIN #7 AND THE 12 VOLT SUPPLY TO POWER THIS TUNER. THIS PROVIDES APROX. 8 VOLTS, RATHER THAN THE 5 VOLTS LISTED ON THE DATA SHEET. IT TAKES AT LEAST 8 VOLTS FOR MAXIMUM GAIN.

Refer to figure 1. Drill or punch a hole in the top cover. Solder a pickup loop into the underside of the cover so that it comes as close to the oscillator inductor as possible without touching it. Connect the center conductor of a length of RG174 (or other small co-ax) to the top-side end of the pickup loop. Solder it's outer shield to the top of the cover.

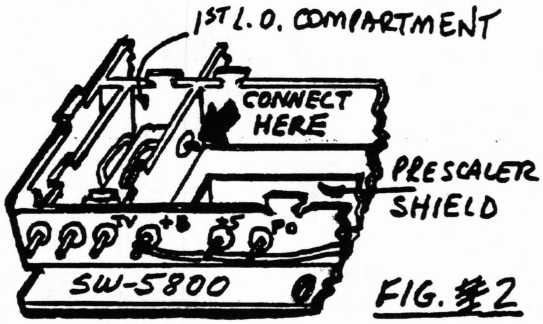

FIG. #2

NEXT: Carefully remove the top cover from the SW-5800 tuner, by straightening the twisted tabs that hold it on. Locate the point labeled "CONNECT HERE" in figure 2. Drill or punch a hole in the top cover large enough to pass the co-ax, so that the hole will be directly above this point when the cover is re-installed. Feed the end of the co-ax you have prepared, through this hole in the top cover. Carefully solder the center conductor of the co-ax to the feed thru lead labelled "CONNECT HERE". This point is connected to the pick-up loop in the 1st local oscillator compartment.

Do not disconnect the small disc capacitor that is already connected there. Next, carefully solder the co-ax shield to the side of the thin metal shield around the prescaler chip. After you have checked your work carefully, re-install the top cover on the SW-5800 tuner and carefully re-bend the tabs.

Now, in addition to switching the outputs and B+ between the 2 tuners when we switch between VHF and UHF, we want to keep the B+ alive on the pre-amp and pre-scaler regardless of which tuner we are using, since we will be using them all the time. To accomplish this, isolate the pre-amp/pre-scaler B+ leads (as in figure 3.) and connect them permanently to their respective B+ supplies, 24 volts for the pre-amp and 5 volts for the pre-scaler.

Since the first IF in the tuners are different, the IF offset adjustment R19 in the SW-6007 must change when we switch tuners. This means that we must add a second "R19" offset adjustment control that we will switch to when we switch to the UHF tuner. Mount this control close to the SW-6007 board.

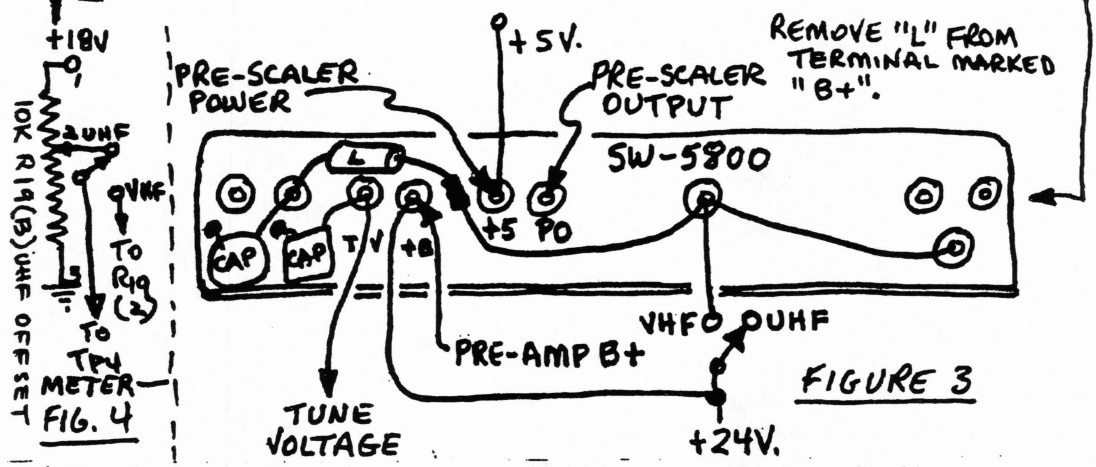

FIGURE 3

This adds another single-pole-double-throw section to the UHF/VHF switch.
Use a known signal on the UHF band to adjust this second offset control. Do not readjust any of the other SW-6007 calibration controls!

That does it! WA2PZO © SCIENCE WORKSHOP

"SUPER" HI-FREQUENCY UHF VARACTOR TUNER (SW-5820)

PRELIMINARY DATA SHEET

These Varactor (voltage tuned) tuners tune from approximately 900MHz to 1.5GHz.

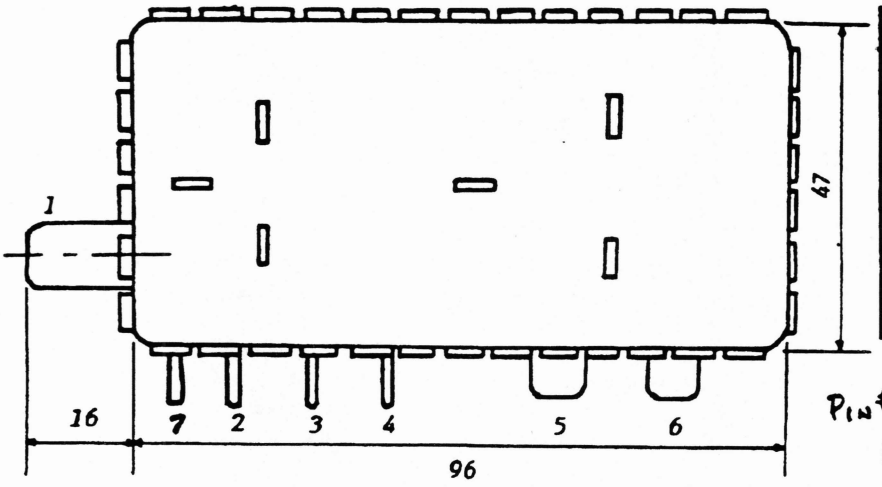

NO.	FUNCTION
1	ANT I/P
2	
3	+B (+12V)
4	VT
5	IF O/P
6	OSC FREQ O/P
7	AGC

PIN #2 IS NOT USED.

Fig. 1

Input/Output impedance.....75 ohms
Power Gain (controlled by varying the AGC voltage)..12dB min.
Power Supply.....12 volts

When used in conjunction with the SW-5800 (VHF) and SW-5810 (UHF) tuners, it enables the "Poor Man's Spectrum Analyzer" to display all signals in the spectrum from 0 to 1.5GHz.

The 3 ranges (0 to 500MHz, 450 to 900MHz and 900 to 1500MHz) can be selected with a single pole, 3 position switch that switches the output of the tuners to the input of the Main Board.

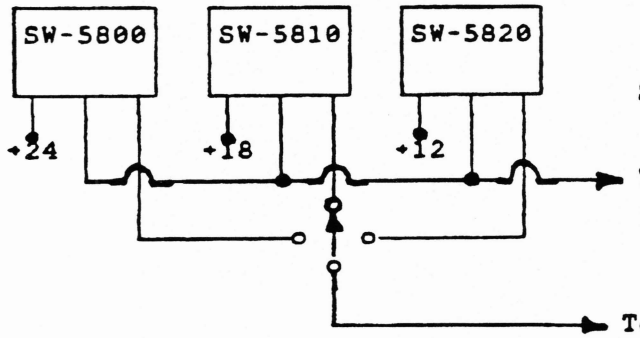

Fig.2

Switching tuner outputs.

Note the different B+ voltages for the 3 tuners. It might be worthwhile to switch off the B+ to the unused tuners to prevent picking up radiation from their local oscillators.

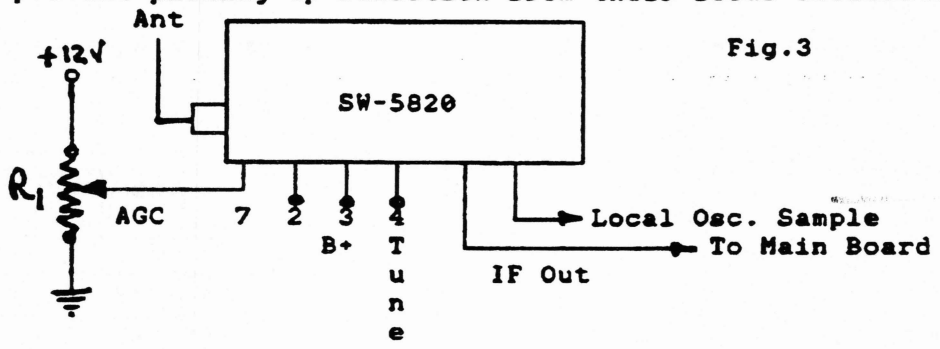

Fig.3

It should be possible to couple the local oscillator signal from the #6 output jack on the tuner into the pre-amp of the SW-5800 (VHF) tuner, as illustrated in the instructions packed with the SW-5810 (UHF) tuner, to have it drive the SW-6007 Digital Center Frequency kit. I haven't had a chance to work out the details, but if you are interested, drop me a line and I'll let you know if it works (and how to do it?).

R_1 CAN BE ANY VALUE. APPROX. +6 VOLTS (AGC) PRODUCES MAXIMUM GAIN. ADDING A RESISTOR IN SERIES WITH THE TOP OF R_1 (TO LIMIT THE APPLIED VOLTAGE) WOULD BE WORTHWHILE.

EXAMPLE:

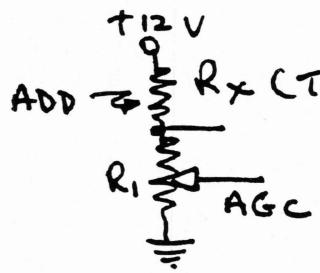

SCIENCE WORKSHOP SW-5900 TRACKING GENERATOR

The addition of a Tracking Generator to the Spectrum Analyzer provides a powerful receiver system for stimulus-response measurements. Since the instantaneous output frequency of the SW-5900 matches the instantaneous input frequency of the Spectrum Analyzer, the swept frequency test system acts as a very sensitive synchronous detector. Harmonics of the signal are not displayed because the Tracking Generator output is always at the Spectrum Analyzer input frequency. This makes it the ideal setup for measuring the frequency response of active and passive devices such as amplifiers, filters, couplers, attenuators, transmission lines, and even antennas when used with an external bridge.

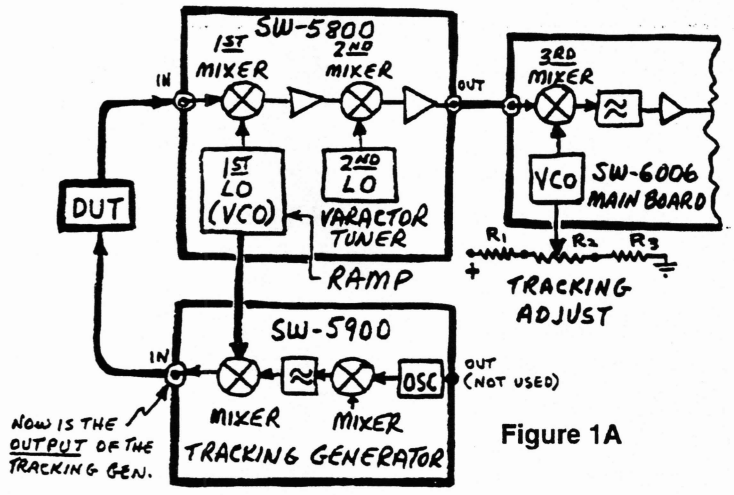

Figure 1A

The Tracking Generator output signal is generated by mixing two or more oscillators. Figures 1A and 1B are simplified block diagrams of the Science Workshop Spectrum Analyzer/Tracking Generator. The incoming signal to the Spectrum Analyzer mixes with the Local Osc., and when the mixing product equals the IF, this signal passes through to the detector. The detector output is amplified and produces a vertical deflection on the CRT display. Synchronism between the horizontal frequency axis of the CRT display and the tuning of the LO is provided by the sweep (ramp) generator, which drives the horizontal CRT deflection and tunes the LO. The Tracking Generator uses the same swept LO from the Spectrum Analyzer and mixes it with a fixed IF oscillator.

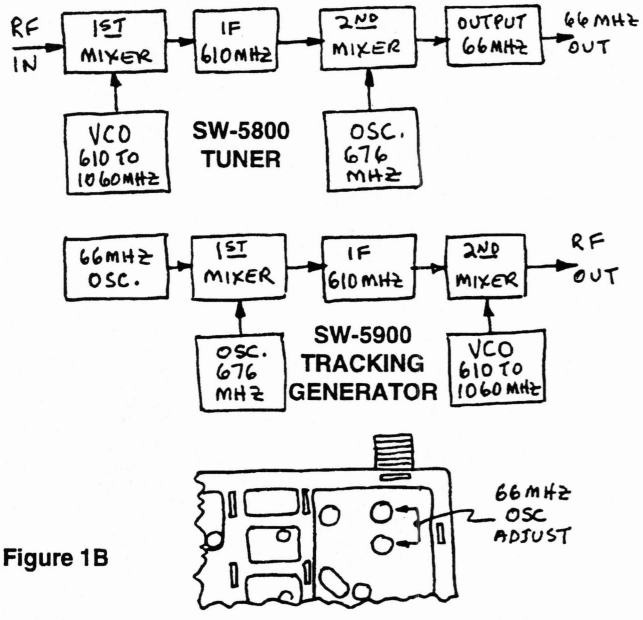

Figure 1B

Since the LO from the Spectrum Analyzer is used by the Tracking Generator to produce it's output, it is always in sync.

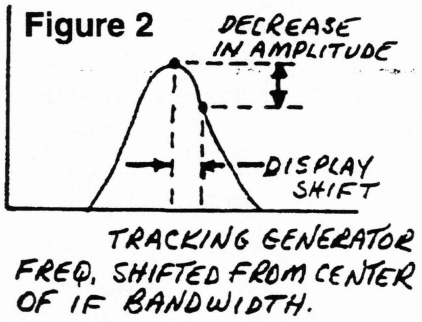

A tracking error occurs if the Tracking Generator's output frequency is not exactly matched to the input frequency of the Spectrum Analyzer. The resulting mixing product from the Spectrum Analyzer's input mixer is not at the center of the IF bandwidth. This shift in frequency causes the tracking signal to fall on to the skirts of the IF filter, resulting in a reduction in amplitude of the display. (See Fig.2) To compensate for any tracking error that might occur, Tracking Generators provide a front panel adjustment of the IF oscillator. This tracking control is tuned to maximize the amplitude of the trace and should be adjusted before any measurements are made. Once the IF oscillator is adjusted, the spans of the two instruments are matched and synchronous, and precise tracking is assured.

Before adding the Tracking Generator module, make sure that your Spectrum Analyzer is working properly. Tune in a single, strong, reliable carrier that you can depend upon for a reference check after the Tracking Generator module is installed. A signal generator is best for this step, but a local TV station is a good reference. Once this is done, mark the settings so that you can duplicate the display.

Your Tracking Generator package consists of:

1.) SW-5900 Tracking Generator module.
2.) A package of small component parts, containing:

1-3.3k 1/4 W. resistor.
1-100k " "
1-0.1mfd. disc capacitor.
1-MV2101 varactor diode.

MODIFYING THE SW-6006 MAIN BOARD

The 4 small components must be added to the SW-6006 Main Board. Install them in the upper left hand corner, near the 'E' terminal, as shown in figure 3. Carefully remove the 3.3pf disc capacitor next to Ll and re-install as shown. Connect a lead to terminal 'E', long enough to reach a control that you will be installing on the front panel.

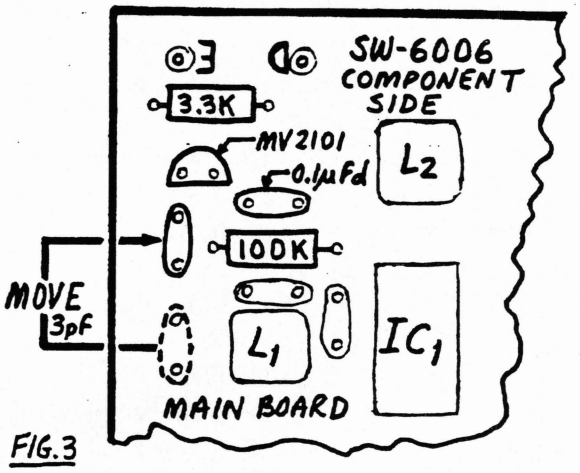

FIG.3

Looking at the solder side of the Main Board, solder a small jumper from the bottom of the L1 secondary winding to the ground pin located between the 2 secondary pins as illustrated below.

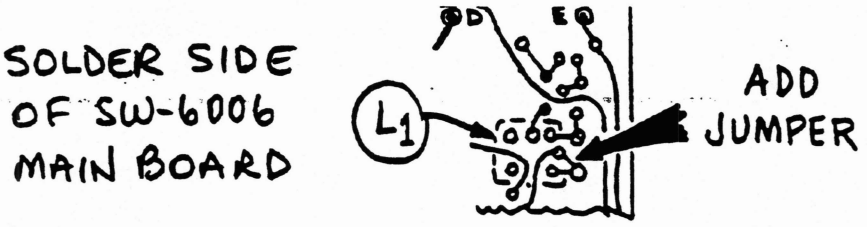

This completes the work on the Main Board.

ADDING THE "TRACKING ADJUST" CONTROL

When we moved the 3pf disc on the Main Board, we added a varactor tuning circuit to the oscillator on this board. This now allows us to tune this oscillator from the front panel. Since we only need a slight adjustment to center the signals in the passband of the 10.7 Mhz IF filters, we will set up a voltage divider to provide the voltage required to produce the desired frequency change. Temporarily connect the 'Tracking Adjust' control potentiometer (any value greater than IK) across the regulated output of the Ramp Board (terminal '0') to ground. Connect the center arm to 'E' on the Main Board (SW-6006). Turn on your Spectrum Analyzer. Carefully adjust the potentiometer so that the display duplicates the one you had previously set up as a reference. The control will tune very FAST and may stop the oscillator at either or both ends of it's rotation. This is to be expected because of the large voltage swing on the varactor diode. Carefully adjust the control for maximum amplitude of the reference carrier. When you are certain that you have maximum amplitude of the original signal, measure and record the voltage on the center arm of the control. This is the voltage we want applied when the 'Tracking Adjust' control is set to the center of it's range. We will want the control to vary +/- 1 volt from this value. To do this, we will add a pair of 'wing' resistors (R1 and R3) on each end of the control (figure 1A).

Let's use a hypothetical value of 5 volts on the center arm of the control to calculate the values of the two series resistors. Assuming a 20 Volt supply, and a 10K control (it can be any value), we want a 2 volt drop across it (1 volt on either side of the center arm). That puts the top of the control at 6 volts and the bottom at 4 volts. Therefor, we want a 4 volt drop across the bottom resistor and a 14 volt drop across the top one (all the voltage drops adding up to the 20 volt supply). If the 10K control produces a 2 volt drop, then we need 2 times that resistance to produce the 4 volt drop across R3, and 7 times the 10K resistance to produce the 14 volt drop across R1. Therefor, 7 x 10K = 70K for R1, and 2 x 10K = 20K for R3.

Use YOUR measured voltage and the value of the control you will be using to calculate your values of R1 and R3. Use the closest standard resistor values. Wire up the control circuit and measure the results before continuing.

INSTALLING THE SW-5900 TRACKING GENERATOR MODULE

The SW-5900 Tracking Generator module should be mounted alongside the SW-5800 tuner, since they must be connected together by the co-ax cable. There are only 3 connections to the Tracking Generator module, 24 V. (B+), ground and the co-ax cable. Do not use '0' on the

Ramp Board for B+, since these modules draw over 100 ma. each, which would exceed the capacity the 78L18.

Remove 1/2" of insulation from the loose end of the co-ax lead attached to the SW-5900 Tracking Generator module. Separate the shield from the center conductor. Strip and tin the center conductor and the shield. Carefully remove the top cover from the SW-5800 tuner, by straightening the twist tabs that hold it on. Locate the point labeled 'CONNECT HERE' in figure 4. Drill or punch a hole in the top cover large enough to pass the co-ax, so that the hole will be directly above this point when the cover is re-installed. Feed the end of the co-ax you have prepared, through this hole in the top cover. Carefully solder the center conductor of the co-ax to the feed thru lead labelled 'CONNECT HERE'. This point is connected to the pick-up loop in the 1st local oscillator compartment. Do not disconnect the small disc capacitor that is already connected there. Next, carefully solder the co-ax shield to the side of the thin metal shield around the pre-scaler chip. After you have checked your work carefully, re-install the top cover on the SW-5800 tuner and carefully re-bend the tabs.

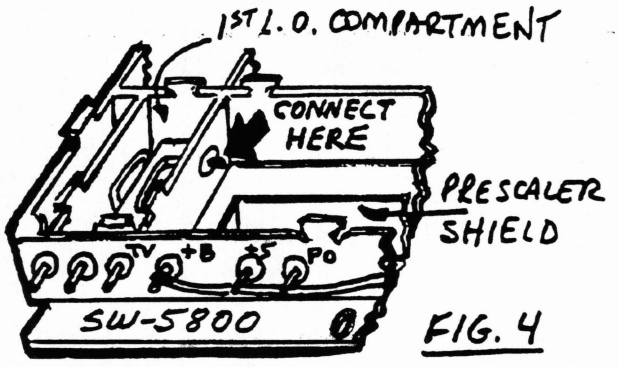

FIG. 4

TRANSMISSION MEASUREMENTS

The combination of a Spectrum Analyzer and Tracking Generator makes it possible to check insertion loss, gain and frequency response. Figure 1A illustrates the set-up. The RF output from the Tracking Generator is connected to the input of the Device Under Test (DUT), and the output of the DUT is connected to the input of the Spectrum Analyzer, A small test fixture should be built to make it convenient to insert devices to be tested between the output of the Tracking Generator and the input to the Spectrum Analyzer. Exposed test leads should be kept as short as possible to minimize stray inductance and capacitance, and unwanted RF signals. Before a measurement is made, the DUT should be removed and the output of the Tracking Generattor should be connected directly to the input of the Spectrum Analyzer. The center frequency and width controls should be set to center the display. The 'tracking adjust' control should then be adjusted for maximum upward deflection of the display, Since the tracking control centers the tracking signal in the bandpass of the filter, it can also to serve to adjust the sensitivity of the analyzer and shift the display into a more linear area, Anything other than a straight , horiztontal line (except at the high and low frequency ends of the scan) might indicate that:

a.) The width control is probably set too wide. (Use the minimum width necessary to display the frequency response curve. Since we do not have an automatic leveling circuit, which would add substantially to the cost, the output of the tracking generator is not necessarily constant over the full range of frequencies).

b.) There may be standing waves on the leads connecting the two units. Try terminating them with a 75 ohm resistor.

MAKING YOUR FIRST MEASUREMENT

After you have assembled and checked out everything, you will want to see if the combination Spectrum Analyzer/Monitor Receiver/Tracking Generator really works! The easiest way I've found is to hang a piece of co-ax, approximately 10 to 12 inches long in parallel with the input and output of the two modules, in place of the DUT. Tune across the spectrum for a notch in the response curve, If you remember your transmission line theory, you may recall that an open 1/4 wave line reflects a short circuit back to the beginning of the line, acting as a trap at that frequency, which accounts for the notch. Now, start clipping 1/4' lengths from the open end of the co-ax and watch the notch move up in frequency! Now, if we had a counter that would read out the center frequency ...(like the Digital Readout Board)....we could see what that frequency is. If we go back to the 1/4 wave length co-ax and try terminating it with different values of resistance until the notch disappears, it ought to tell us what the characteristic impedance of that co-ax material is at that frequency! Can you imagine the possibilities? Connect the transmission line from your antenna in place of the 1/4 wave stub we've been looking at. You may be in for a surprise!

I've only hinted at the possibilities. If youv'e had enough smarts to order my "Poor Man's Tracking Generator", then I'm sure you have the smarts to find a lot more applications than I've mentioned! I would like to hear about them.

INSTRUCTION SHEETS FREQ. READOUT KIT 1

SW-6007 CENTER FREQUENCY READOUT CIRCUIT KIT

This NEW KIT uses a unique combination of Analog and Digital circuitry to accomplish a relatively complex task. The conventional approach to this problem has always been purely digital, requiring anywhere from 10 to 20 digital chips. In keeping with the philosophy demonstrated by the design of the "Poor Man's Spectrum Analyzer". There had to be a simpler, more economical way. Since we are looking at a CRT display, covering anywhere from a few Mhz to several hundred, what was needed was a 3-digit readout that could display 0 to 500 MHz directly.

PREVIOUS SOLUTIONS.

Most frequency read-out circuits use the local oscillator signal to generate the display. This signal is offset from the incoming RF signal by an amount equal to the IF frequency. A little arithmetic must be performed to either add or subtract the IF signal to get back to the received frequency. This has required the use of heterodyne oscillators, presettable counters, or to somehow play games with the time base to accomplish the same result. These methods provide a relatively inflexible solution.

A NEW APPROACH.

Rather than using the conventional all digital circuit, I decided to use a Precision Frequency-to-Voltage converter IC, along with the output of the prescaler IC in the SW-5800 tuner. A bit of Analog Computer circuitry took care of the remaining math. Although this circuit was designed to work with the SW- 5800 tuner, it provides experimenters with a simple low cost solution for directly displaying the received frequency of almost ANY receiver. A simple adjustment of a potentiometeris all that is required to accommodate any IF frequency from 0 to hundreds of MHz. For the first time, a TRULY UNIVERSAL DIRECT DIGITAL FREQUENCY READOUT!

HOW THE CIRCUIT WORKS.

The SW-5800 tuner has a 1st IF of 610 MHz. The 1st local oscillator uses high-side injection, which means that to tune from 0 to 500 MHz it must vary from 610 to 1110 MHz. This signal is divided by 256 by the prescaler in the tuner. The output of the prescaler varies from 2.38 to 4.33 MHZ (610 to 1110 divided by 256). This is applied to the input of the Digital Readout Board. A two transistor preamp interfaces the input signal to a pair of divider chips that further divide the signal by 1,000. The resulting 2.38 to 4.33 KHz signal is applied to a precision frequency-to-voltage converter. From here on, the circuit is all Analog. The 2.38 to 4.33 KHz signal is now a 2.33 to 4.33 VOLT signal. An op-amp provides an Analog multiplication (X 2.56), and a DC OFFSET control performs an Analog subtraction (- 6.10) to compensate for the 610 MHz IF offset. The digital equivalent of this process would have required many more digital chips. The resultant output voltage varies from 0 to 5.00 volts.

DISPLAY OPTIONS.

To keep cost's down, I designed the circuit so that it could use your Digital Voltmeter as the display. With the meter set on the 20 volt scale, 0 to 500 MHz would be displayed as 0.00 to 5.00 volts. At first I found the decimal point annoying, but it didn't take too long before I was ignoring it. Later, when I found time, I bought a $29 DVM, disabled the decimal point and dedicated that meter display to my Spectrum Analyzer. We [redacted] have Miniature LCD Digital Panel Meter Modules available that are ideal for this application. They measure 1" x 2" x 0.5" and easily mount into a rectangular cut out.

OTHER APPLICATIONS FOR THE SW-6007.

There should be many other "frequency meter" applications for this unique circuit. Since this circuit could be used with ANY I.F., it represents a real breakthru. Adjusting the I.F. offset with the simple setting of a single control has been unheard of until now! This means that it could be used with ANY receiver! All that is necessary is to feed the local oscillator signal into the input of the board, make sure that the output frequency of the dividers falls within the range (approximately 0.5 to 10 KHz) of the F/V converter, and perform the calibration procedure. Changing some of the jumpers (note the extra hole above the jumper at Test Point #1) provides an extra measure of flexibility. The output of the dividers can be chosen so that the input is divided by any combination of the four "divide by 2" and "divide by 5" stages. The input and output of the individual divider stages could be brought out to a front panel switch to provide a wide range of frequencies that could be measured by this circuit. I would be most interested in hearing about ideas that you might come up with.

INSTRUCTION SHEETS FREQ. READOUT KIT 2

PARTS LIST

Resistors				Capacitors		Inductors	
R1	2.2K	R11	[redacted] 15K	C1	.02mfd	L1	RF choke
R2	1Meg	R12	13K	C2	.02mfd	L2	RF choke
R3	750	R13	100K	C3	.02mfd	Transistors	
R4	68K	R14	68K	C4	.1mfd	Q1	[redacted] 2N5459
R5	470	R15	39K	C5	470pf	Q2	[redacted] 2N3904
R6	1K	R16	5K*	C6	.01mfd	IC's	
R7	10K	R17	[redacted] 6.8K	C7	.1mfd	U1	74LS390
R8	10K	R18	10K*	C8	1.0mfd	U2	74LS390
R9	68K	R19	5K*			U3	LM331
R10	6.8K	* = trimpots				U4	LM324

ASSEMBLY INSTRUCTIONS.

The following assembly procedure is recommended:

1.) Install 8 jumpers as indicated in figure 1. The jumpers labeled "1, 2, 3, & 4" will be used as test points for calibration and should be formed as "loops", as in figure 2.

2.) Install 2 inductors, 16 resistors and 3 trimpots as indicated in figure 3. Solder the grounded ends of the five resistors marked "x" on both sides of the PC board.

3.) Install 2 transistors and 8 capacitors, as indicated in figure 4.

4.) If you haven't had much experience working with IC's, install sockets for the 4 chips. They have all been tested before being shipped. Handle them carefully! Install them in the locations indicated. Note the location of the number 1 pin.

4.) Check your work carefully for excess solder, splashes, shorts or "cold" solder joints. This completes the assembly.

TEST AND CALIBRATION PROCEDURE.

NOTE: The legends on the circuit board indicate "+5 and +12 volt" power supply connections. I have since found that it is necessary to have 18 volts, rather than 12, for proper operation of the op-amp. NOTE: The accuracy and stability of the display is directly related to the accuracy and stability of this voltage. Final calibration should not be performed until the power supply has warmed up and is stable. Since we are calibrating circuits working with small DC voltages, careful attention to accurate setup measurements will assure accurate results.

1.) Connect a Digital Voltmeter between Test Point #3 and ground.

2.) Connect regulated +18 volts between the +12 volt terminal and ground. Neither the +5 volt supply or the input signal need to be connected at this time.

3.) Apply +2.77 volts between Test Point #2 and ground.

4.) Adjust the "Gain" trimpot (R18) for 7.09 volts at Test Point #3.

5.) Shift the Digital Voltmeter negative test lead from ground to Test Point #4. Leave the positive test lead at Test Point #3.

6.) Adjust the "Offset" trimpot (R19) for 1.00 volt on the DVM.

7.) Now connect the output of the prescaler on the SW-5900 tuner to the input of the Digital Readout Board. Also connect the +5 volt regulated supply between the +5 volt terminal and ground.

8.) If a signal generator is available, set it to 100 MHz and tune the Spectrum Analyzer so that the 100 MHz signal is centered on the CRT. Use a relatively small scan "width" setting on the Analyzer.

9.) Adjust the "Calibration" trimpot (R16) for 1.00 volt (representing 100 MHZ). on the DVM. This completes the calibration process. If a signal generator is not available, any known signal can be used just as well.

TROUBLESHOOTING.

Your 'scope and DVM are all that are necessary to find a problem, if the calibration procedure can not be performed. The first part of the calibration procedure uses the circuits of the op-amp, U4. Any problem here would be limited to this chip and its components. Your DVM and our "Typical voltage and resistance chart" should locate the problem. The second part of the procedure depends upon the correct operation of the remainder of the circuit. It can be broken down into three parts, the preamp, the dividers and the F/V converter. Your 'scope can be used to check the operation of the preamp (Q1 and Q2) and the dividers (U1 and U2). Trace the 2.38 to 4.33 MHz signal from the tuner prescaler output to the board and thru the preamp. Remember, +5 volts must supplied to the prescaler +5 terminal on the SW-5800 tuner. The jumper between the output of the preamp and pin #4 of U1 is a convenient place to check for the output of the preamp. It should be approximately 3 volts peak to peak. No signal would indicate a problem in the preamp. The next test would be at Test Point #1. A square wave of almost 5 volts peak to peak should be present here. No signal would indicate a problem in the divider circuits. Finally, your DVM connected to Test Point #2 should show a DC voltage that will vary from 2.38 volts to 4.33 volts, depending upon the frequency tuned by the SW-5800. Spurious signals may be generated by the circuits on this board. They can get into the tuner and show up on the CRT display. This can be checked by disconnecting the input signal to the board. Using a double-sided board with maximum ground plane area, in conjunction with L1 and L2 should prevent this from happening. If it persists, check the grounding between the ground planes of the PC board and the chassis. It may be necessary to add additional capacitive filtering to the +5 and +18 volt leads at the board terminals. This means both hi-freq. (feed-thru capacitors) as well as electrolytic capacitors. Otherwise, the power supply leads may radiate.

VOLTAGE AND RESISTANCE MEASUREMENTS.

The following set of readings were taken with the Spectrum Analyzer tuned to 100 MHz. The values stated should not be taken as absolute, but are provided only as an aid for troubleshooting. Voltages on the unused IC pins can vary all over the lot, others can easily vary 20% or more. All readings are referenced to ground.

VOLTAGE READINGS (In DC volts, measured with a DVM).

Q1		U1				U2				U3		U4		
Source	0.88	1	0.76	9	0.87	1	0.90	9	0.90	1	2.70	1	7.09	8	16.4
Gate	0.00	2	0.00	10	1.50	2	0.00	10	1.60	2	1.80	2	2.70	9	2.14
Drain	4.57	3	1.90	11	1.50	3	2.00	11	1.60	3	0.00	3	0.00	10	2.50
		4	1.20	12	1.90	4	2.00	12	2.00	4	0.00	4	17.70	11	0.00
Q2		5	1.30	13	2.00	5	1.60	13	2.00	5	1.60	5	2.10	12	2.30
Emitter	0.00	6	1.30	14	0.00	6	1.60	14	0.00	6	17.70	6	2.00	13	2.30
Base	0.20	7	0.70	15	0.80	7	0.90	15	0.92	7	15.30	7	16.40	14	6.40
Coll.	2.19	8	0.00	16	4.50	8	0.00	16	4.50	8	17.70				

RESISTANCE READINGS (In ohms).

Q1		U1				U2				U3		U4		
Source	1K	1	*	9	*	1	*	9	*	1	100K	1	111K	8	*
Gate	1Meg	2	0	10	*	2	0	10	*	2	13.9K	2	44K	9	*
Drain	750	3	*	11	*	3	*	11	*	3	0	3	98K	10	*
		4	1K	12	*	4	*	12	*	4	0	4	16K	11	0
Q2		5	*	13	*	5	*	13	*	5	23K	5	.*	12	*
Emitter	0	6	*	14	0	6	*	14	0	6	26K	6	*	13	*
Base	70K	7	*	15	*	7	*	15	*	7	21K	7	*	14	*
Coll.	1.5K	8	0	16	1K	8	0	16	1K	8	16K				

* = Infinite

* NOTE. Q1 - The 2N5459 JFET replaces a part that is no longer available. Carefully align it's leads over the Q1 hole pattern. Insert the 3 leads as indicated and solder.

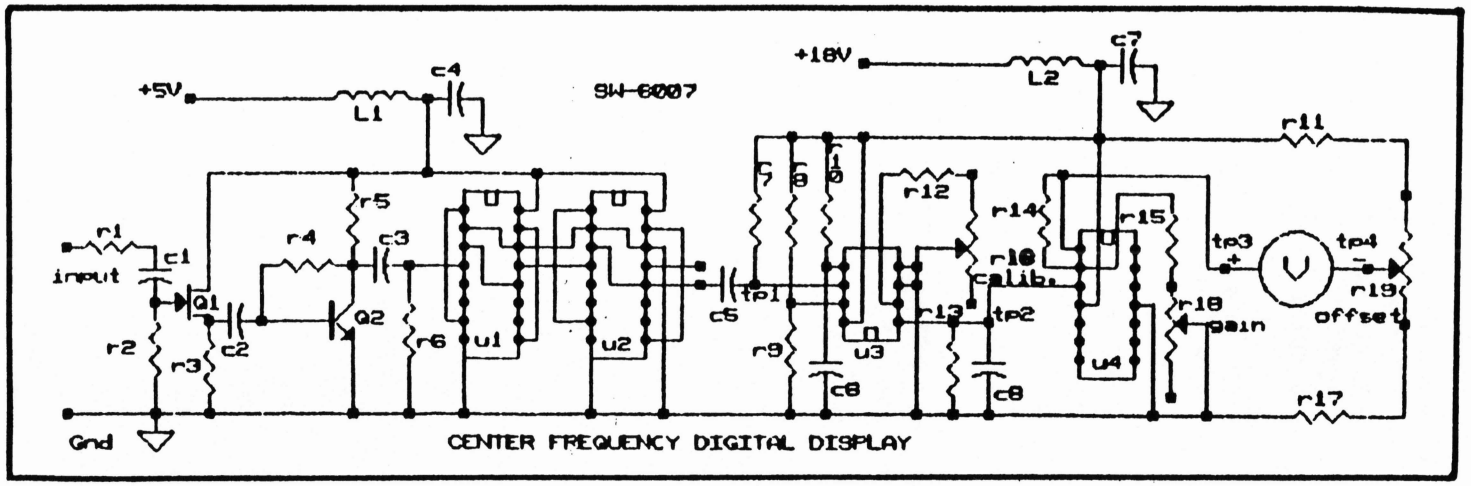

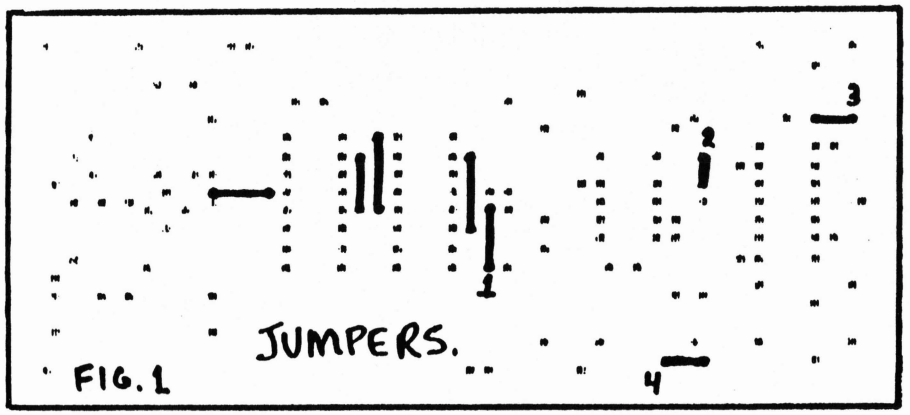

FIG. 1

FIG. 2

JUMPERS NUMBERED 1 THRU 4 SHOULD BE FORMED INTO "LOOPS" FOR TEST POINTS. NUMBERS 3 AND 4 ARE ALSO USED AS "OUTPUT" TERMINALS.

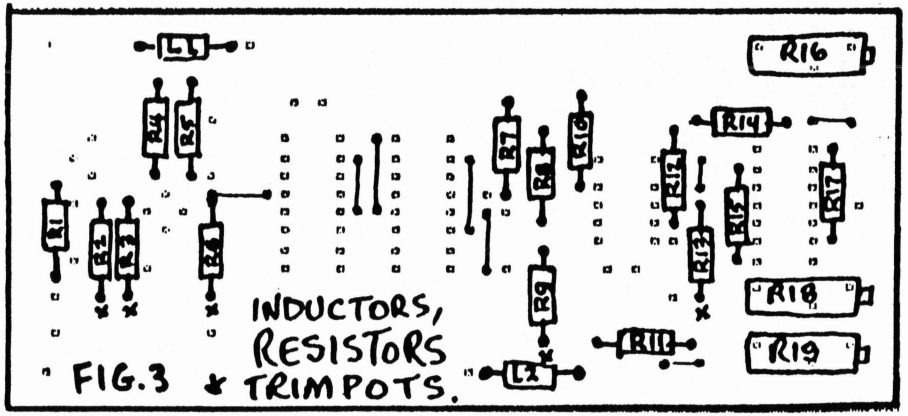

FIG. 3

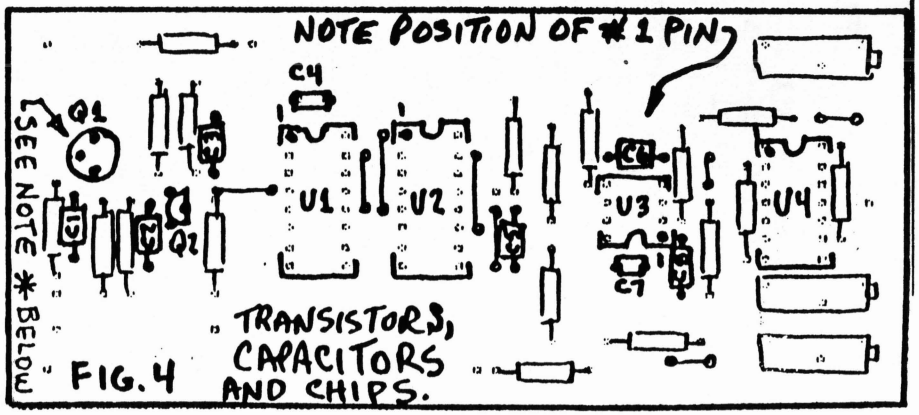

FIG. 4

SW-PS1 SPECTRUM ANALYZER POWER SUPPLY

The SW-PS1 Power Supply Kit contains the printed circuit board and components (other than the power transformer) that are required for most functions of the Spectrum Analyzer. I've added the word "most" because the choice of features determines the power supply requirements. For example: If you didn't chose to add the LED display to your instrument, you wouldn't need the extra isolated 5 volt supply. It wouldn't be fair to have you pay for the extra components necessary for this 2nd 5 volt supply. So, I've provided the circuitry for it on the power supply board, but I have not included those extra components. (See discussion on LCD/LED display power.)

Secondly, since power transformers are heavy and bulky (and are available from Radio Shack, etc. at prices that I can't beat), I've chosen not to add them to this kit.

POWER REQUIREMENTS

The following table lists the voltage and approximate current requirements for the various modules presently available for the Poor Man's Spectrum Analyzer.

Module	Voltage	Current
Main Board (SW-6006)	12	40 ma.
Ramp Board (SW-6001)	33	25 ma.
VHF Tuner (SW-5800)		
B+	24	100 ma.
prescaler	5	75 ma.
UHF Tuner (SW-5810)	18	30 ma.
DRO Board (SW-6007)	18	20 ma.
	5	30 ma.
LCD Display	5*	10 ma.
LED Display	5*	80 ma.

* Isolated supply.

Although the Main Board and the Tuners B+ supplies really do not have to be regulated, the added decoupling and filtering provided by the regulators, makes their use worth while. In

addition, the use of 1 ampere regulators may seem to be overkill, but the relatively small difference in cost between them and the lower current versions makes them the better choice.

ASSEMBLY NOTES

You MUST observe the polarity (and regulator pin #1) markings on all of the components, except the disc capacitors! Refer to the drawings on the PC board and in these instructions. Heat sink the voltage regulators (78XX) by mounting them on the chassis. Run leads from the PC board to their terminals, as in Fig.1 . Note the position of the #1 pin. The large, flat side of the regulator IC's should be flat against the chassis for maximum heat transfer.
The 24 volt power transformer is the Radio Shack part number 273-1366, or any other 24 volt center tapped transformer capable of delivering 450 ma.

PARTS LIST

Diodes

4 - 1N4004 (D1-D4)

PC Boards

1 - SW-PS1 PC Board

Voltage Regulators

1 - 7824 (U1) 1 - 7818 (U2) 1 - 7812 (U3) 1 - 7805 (U4)

Disc Capacitors

6 - 0.1mfd (C2,C3,C5,C6,C8,C9,C11 & C12)

Electrolytic Capacitors

1 - 1,000mfd/50V. (C1) 1 - 470mfd/35V. (C4)
1 - 2,200mfd/35V. (C7) 1 - 10mfd/16V. (C10)

LED/LCD DISPLAY ISOLATED POWER SUPPLY

If you are adding a LED or LCD center frequency display and it does not have it's own power supply, you can add the appropriate components to the lower half of the power supply board. The LED display requires approximately 80 ma., while the LCD only needs about 10 ma. We can steal the 10 ma. for the LCD display from the +18 volt supply, using the circuit supplied with the LCD display. However, the LED's higher current drain requires a separate, small power transformer. Either a 6 volt, 9 volt or 1/2 of a 12 volt center-tapped transformer will do. The other parts are: D1 - 1N4001, C13 - 470mfd/25V., C14 and C15 - 0.1mfd disc capacitor and U5 is either a 78L05 or a 7805 regulator. These parts should be available from Radio Shack, or most other parts suppliers.

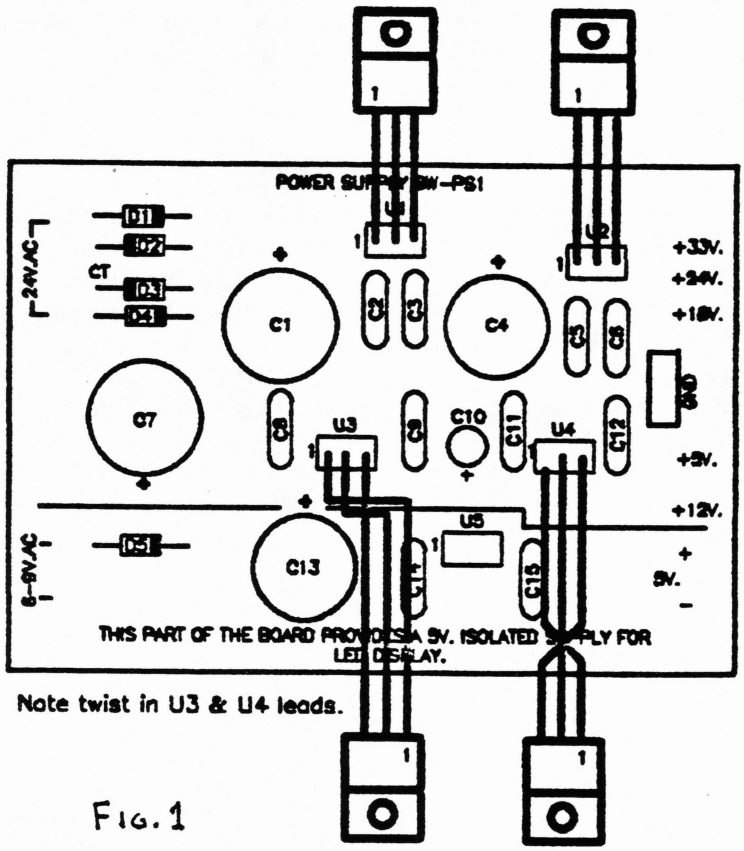

Note twist in U3 & U4 leads.

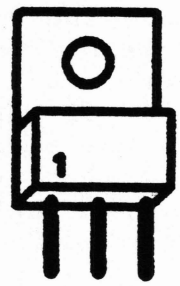

FIG. 1

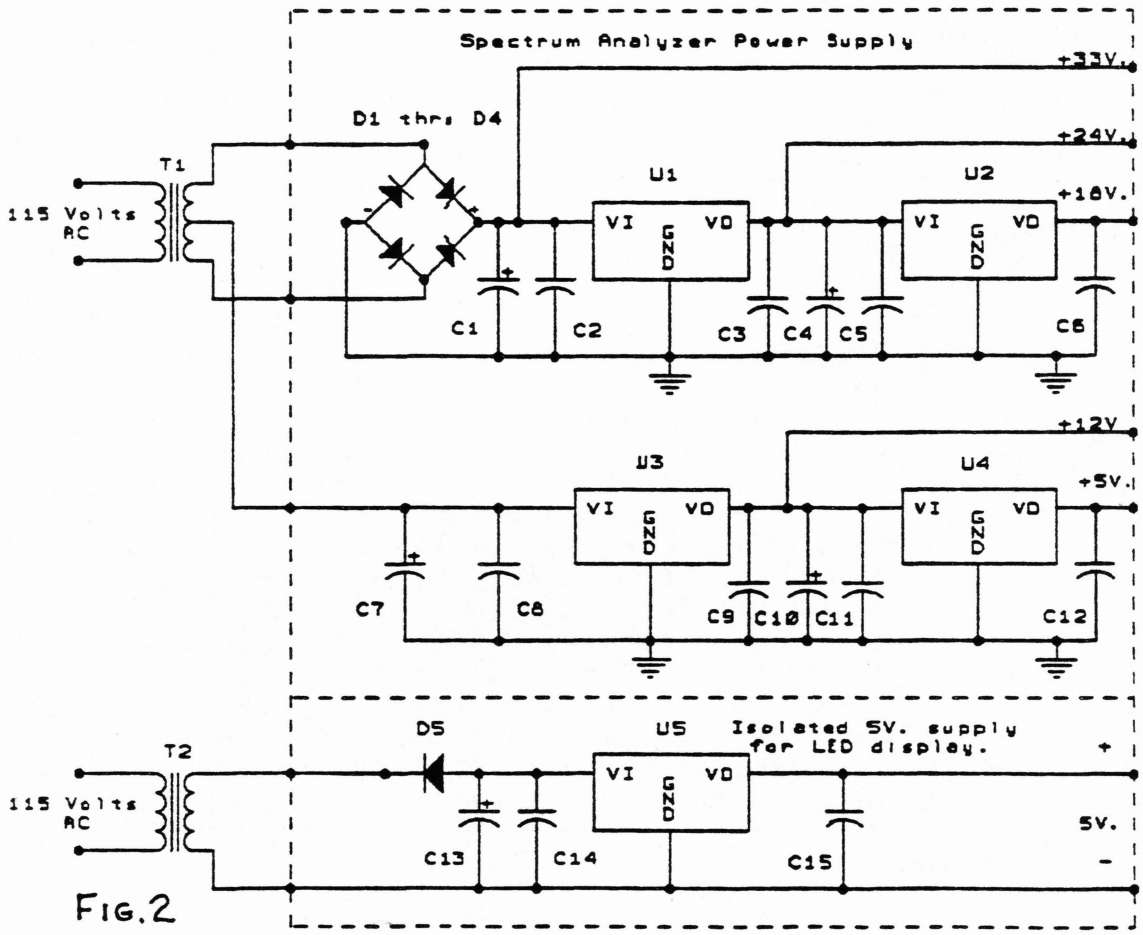

FIG. 2

SW-6010 SWITCHED FILTER KIT

This kit provides the user with the ability to choose any one of 3 IF bandwidth resolution filters using a front panel mounted switch. Before starting to a assemble the Switched Filter Kit, we must remove 2 components from the Main Board which will be installed on to the Switched Filter PC board.

1.) ( ) Carefully remove the two 250KHZ ceramic filters FLI and FL2 from the Main Board.

ASSEMBLING THE SW-6010 ADD-ON KIT

2.) ( ) Install 14 resistors as indicated in Fig:1. (Resistors R12 and R13 on either side of xtal X1 are not to be installed in this version of the kit).

3.) ( ) Install the 6 diodes as indicated. Warning! Observe polarity! The black band on the glass diode marks the cathode end.

4.) ( ) Install the 7 - 0.01 mfd disc capacitors as indicated.

5.) ( ) Install the 2 ceramic filters FLI and FL2 previously removed from the Main Board) in locations FLI and FL2. These are the 250KHz filters marked with a color dot. They are symmetrical and can be installed either way.

6.) ( ) Install the 3rd 250KHz ceramic filter (supplied as part of this add-on kit) in location FL3.

** 7.) ( ) Install the two 55KHz ceramic filters in locations FL4 and FL5 as indicated. These are the ones without the color dot.

8.) ( ) Install the 2 IF transformers in locations L1 and L2.

9.) ( ) Install the 15KHz crystal filter at X1. Since it is symmetrical, it can be installed either way.

10.) ( ) Install the 2N3904 transistor at location Q1. The leads are pre-formed to fit the hole pattern.

This completes the assembly of the add-on board. Check all your soldered connections. Since this is a pretty "busy" little board, be sure that there aren't any cold soldered joints or solder "bridges".

The 3 IF bandpass filters and their diode switching circuits have been assembled on the SW-6010 PC board. This circuitry now has to be installed between the output of the SO-42P chip and the input of the CA3089 chip. Because of the relatively high frequency and sensitivity of this part of the circuit, we want to keep the connecting signal co-ax leads as short as possible. The add-on board should be mounted to the Main Board directly above the area where the two ceramic filters were.

11) ( ) Cut the RG-174 co-ax lead in half. Strip and tin one end of each piece of co-ax (center lead and outer shield) and connect one of them to the "IN" and the other to the "OUT" points on the PC board.

12) ( ) Estimate the length of the leads to be connected between the slide switch and the add-on board (add an inch or two) and connect one end of each lead to the appropriate points on the add-on board. The B+ and co-ax leads will go to the Main Board and should be kept as short as possible.

13.) ( ) Drill a mounting hole in a clear area of the Main Board and mount the SW-6010 add-on board to the Main Board using a spacer and appropriate hardware (or any other mounting scheme you might prefer. Just keep the shielded leads as short as possible).

14:) ( ) Estimate the length required to connect the "IN" and "OUT" shielded leads to the Main Board, then cut, strip and tin them.

** These 2 ceramic filters are not included in this kit. We hope to find another source for them at a reasonable price.

15.) ( ) Connect the "IN" lead to the secondary of L3 on the Main Board. The outer shield connects to ground. See Fig.2. The inner conductor connects to the point marked "X".
16.) ( ) Connect the outer shield of the "OUT" lead to the shield of The "IN" lead (Fig.2). The inner conductor connects to the point marked "Y".
17.) Connect the B+ lead from the add-on board to the B+ terminal on the Main Board.
18.) ( ) Mount the 3-position slide switch on your front panel.
19.) ( ) Connect the 3 leads "A", "B" and "C" from the add-on board to the switch as illustrated in Fig.3.
20.) ( ) Install the R/C decoupling filter (100 ohm resistor and 10 mfd/16v. capacitor) near the switch and connect it as illustrated. The junction of the resistor and capacitor goes to the switch, the other end of the resistor connects to +12 volts. Note the B+ jumper across two of the switch contacts.

This completes the installation of the SW-6010 Switched Filter add-on. The 2 IF transformers on either side of the xtal filter are pre-aligned. Should they require re-alignment, proceed as follows: With the switch set to the 15 khz resolution position, feed an unmodulated RF signal (anywhere in the range of the analyzer) into the input of the analyzer, Center it up on your CRT display, reduce the width of the display so that you can see about a 1/8" space between the skirts of the "pip", and adjust L1 and L2 on the add-on board for maximum amplitude and symmetry, If a signal generator is not available, find a "pip" anywhere on your CRT display that represents an unmodulated carrier (one that isn't wiggling and/or changing in amplitude) and use it for the touch up adjustment.

By the way, for those of you who purchased the FK-1001 filter kit..
the xtal filter in that kit will not work too well in this application, since that xtal filter is centered at 10.5 Mhz, rather then 10.7 mhz. In this application there are two 10.7 mhz filters (L3 on the Main Board and FL3 on the add-on board) ahead of the switched filters, which must line up with the center frequency of the xtal filter.
NOTE: As the IF bandpass is narrowed (especially in the case of the 15 khz xtal filter position) the sweep rate becomes important. Since the filters have a time constant, they have to charge and discharge as the spectrum is swept. If they are swept too quickly, they do not have enough time to charge and discharge. This shows up as a widening of the "pip", which defeats the primary advantage of the narrow band filters. In addition, if the filters do not have enough time to charge, many signals may not have enough energy to produce any visible display, creating the impression that the sensitivity of the analyzer has been greatly reduced. Increasing sweep WIDTH has the same effect as increasing the sweep RATE, since we are scanning a greater segment of the spectrum in each sweep. Since we are covering a greater "distance" in the same amount of time, we must be sweeping through these frequencies at a greater rate of speed. This makes the 250 khz position look much better than the 15 khz position in many cases. When you see this effect, find a segment of the spectrum where there are few very closely spaced signals, reduce the width to expand that part of the spectrum, reduce the sweep rate so that the flicker becomes quite obvious and switch between the 250 khz and 15 khz positions to see the difference in resolution. Many spectrum analyzer displays use longer persistence phosphors in the CRT to minimize flicker when the scan rates are reduced to accommodate the narrow band filters.

PC BOARD PARTS LIST			
Resistors		**Capacitors**	**Ceramic Filters**
R1 - 220 ohm	R9 - 2.2K	C1 thru C7 - .01mfd	FL1 thru FL3 - 250 KHz
R2 - 2.2K	R10 - 20K		** FL4 & FL5 - 55 KHz
R3 - 4.7K	R11 - 2.2K	**Diodes**	
R4 - 4.7K	R12 - not used	D1 thru D6 - 1N4148	**Transistors**
R5 - 100K	R13 - not used		Q1 - 2 N 3904
R6 - 4.7K	R14 - 4.7K	**IF Transformers**	
R7 - 100K	R15 - 470 ohm	L1 & L2 - 10.7 MHz	**Crystal Filter**
R8 - 4.7K	R16 - 100K		X1 - 10.7 MHz

The 100 ohm resistor & the 100mfd capacitor are not installed on the PC board.

** NOT IN THIS KIT.

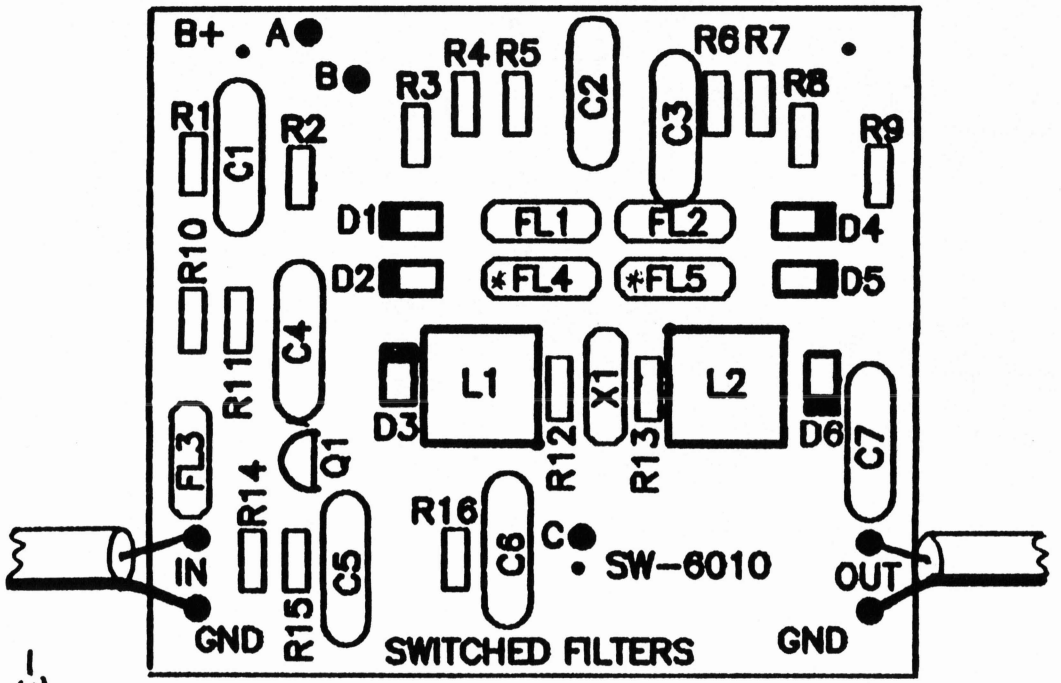

Fig.1

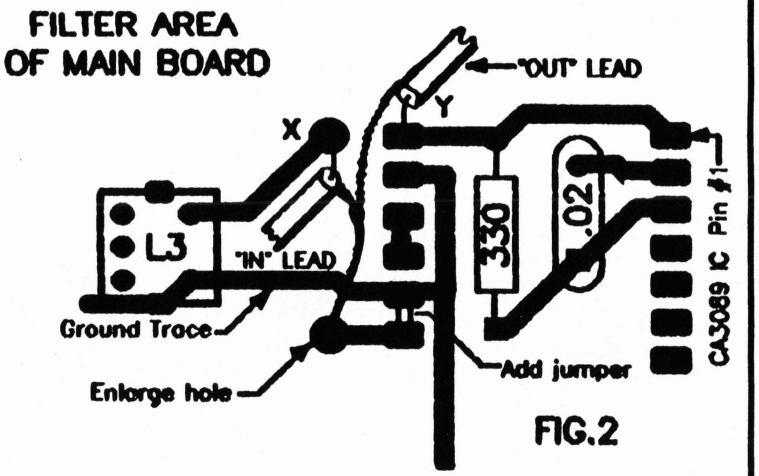

FIG.2

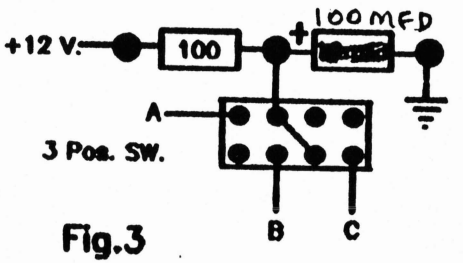

Fig.3

-3-

Rev. 3

SW-6010 SWITCHED FILTER KIT

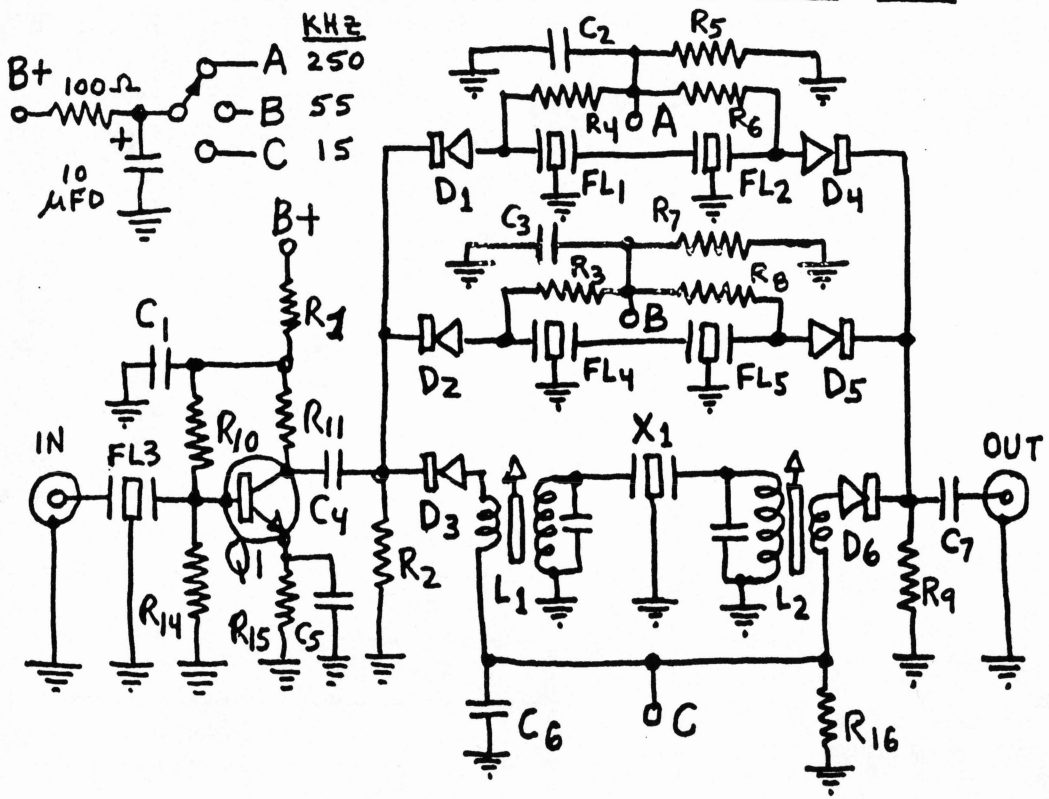

SCIENCE WORKSHOP MARKER/SIGNAL GENERATOR, MSG-100

The Science Workshop MSG-100 Marker/Signal Generator is another illustration of our stated goal to provide the experimenter with extremely low-cost, useful electronic equipment. As with the "Poor Man's Spectrum Analyzer", it allows us to substitute a little "smarts" for a "lotta-bucks"! And once again, the key word is COMPROMISE! The compromises here are the same as those for the "Poor Man's Spectrum Analyzer":

No Power Supply. No Calibration or Specifications. No "easy-to-get" parts or hardware that would be required to complete the project are supplied. No claim that it replaces Tektronix or Hewlett Packard equipment. However, as with the "Poor Man's Spectrum Analyzer", what we do supply and guarantee, is a great educational experience, a small dose of frustration as you try to decipher my best efforts to describe how to assemble, test and apply the results of your labors, and a lot of "bang" for the "buck"!

The MSG-100 Generator is a voltage-tuned signal generator module designed to produce a frequency marker "pip" when used in conjunction with the "Poor Man's Spectrum Analyzer". It's frequency range is approximately 5 to 450 MHz with an output of approximately 10 millivolts into 75 ohms. Even though the SW-6007 Digital Readout Kit identifies the center of the analyzer's display, the addition of the Marker Generator makes it easy to quickly identify each individual signal. It can also be built into it's own enclosure, with it's own Digital Frequency Readout and used as a "stand-alone" signal generator in a variety of other everyday applications. Additional circuitry can be added (such as attenuators, amplifiers and modulators) to make it more useful as a "stand-alone" generator.

The MSG-100 module is actually another modified cable tuner, modified this time to provide a single signal, rather than the swept signal produced by the SW-5900 Tracking Generator module. The principle of operation here is the same as the Tracking Generator, except that this module has it's own VFO, rather than using the VFO from the SW-5800 tuner. This gives us the ability to (voltage) tune it independently over the same frequency range as the SW-5800 modules. Since the MSG-100 also has an internal pre-scaler, we can use the SW-6007 Digital Frequency Readout Kit to display it's frequency, just as we use it to display the SW-5800 tuner's center frequency. This is accomplished by simply adding a SPDT switch, as illustrated.

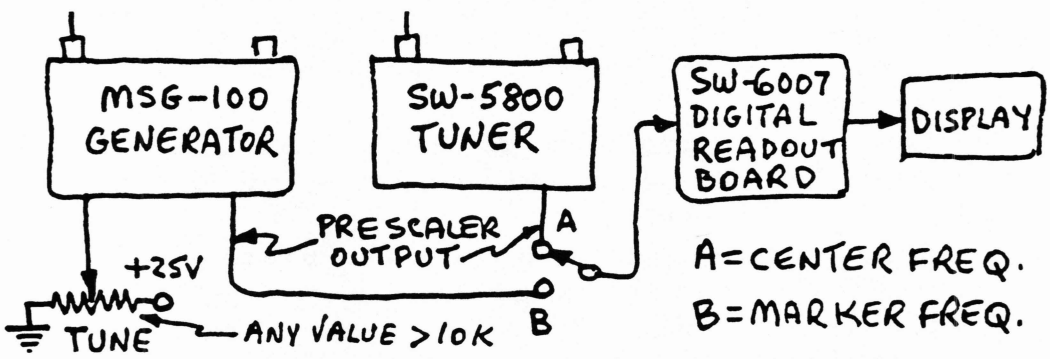

Installation should not present any problem. Physically, the module can be mounted in the same box as the Spectrum Analyzer, since it is a well shielded module, or it can be assembled into it's own box with it's own power supply and additional, optional circuitry.

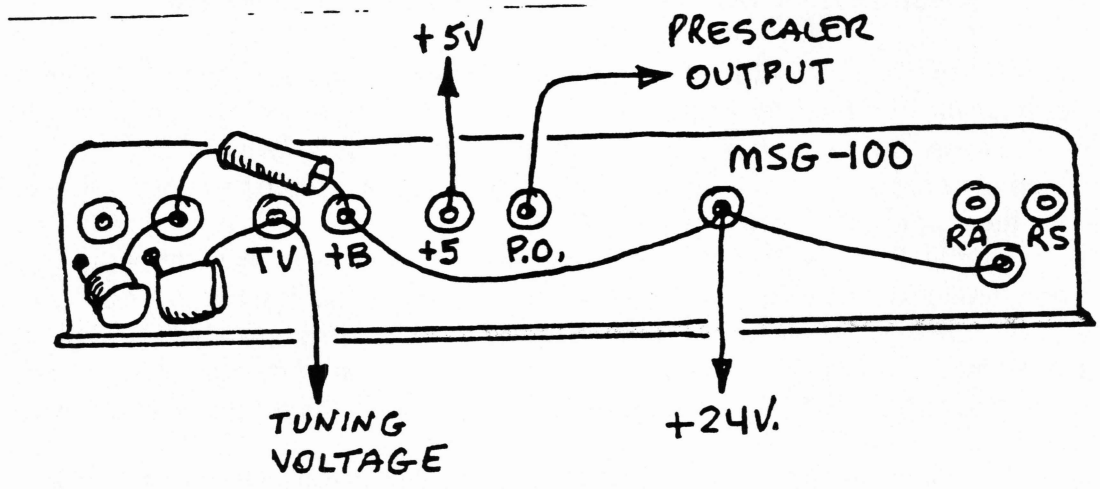

Power requirements are the same as for the SW-5800 tuner, 24 volts @ 100 ma. and 5 volts @ 80 ma. (for the pre-scaler), plus a well filtered, well regulated 25 volts for the tuning voltage, such as that provided by the regulator on the SW-6001 Ramp Board.

ADDITIONAL CIRCUITRY

You might want to consider some of the following suggestions to make the module more useful for "stand-alone" applications:

1.) Add (build or buy) a wide band amplifier to boost the output level.

Radio Shack sells a 5 to 900 MHz 10 dB coaxial 75-ohm inline amplifier (Cat. No, 15-1117) for $14.95, complete with a wall plug power supply. By the way, this unit also works out great for boosting the sensitivity of the Spectrum Analyzer by 10 dB! That gives you two applications for a single $15 investment!

2.) Add AM and/or FM modulation.

Since the generator is voltage-tuned, adding an AC component to the tuning voltage would Frequency Modulate the output of the generator. This AC component could be a sawtooth (for sweep alignment), or audio or video for other applications. Adding the AC component to the B+ supply of the 65 MHz oscillator could Amplitude Modulate the output.

3.) Add an attenuator.

If additional gain is added to boost the output of the generator, a variable attenuator would be another useful addition. It could either be a step attenuator or a continuously variable one. Look for surplus units at most hamfests.

After the unit is completed, the output of the generator has to be coupled to the input of the Spectrum Analyzer. This can be done by adding either a resistor or capacitor between the output of the generator and the input of the analyzer. The value of the resistor or capacitor should be adjusted to provide a marker "pip" with just enough amplitude so that it can be easily recognized across the full range of the analyzer. The signal could also be coupled into the analyzer by adding a small whip antenna to the output of the analyzer, close enough so that it can be picked up by the analyzer. Varying the tuning voltage should cause the "pip" to move

across the display. When the "pip" is superimposed on to the unknown signal, it's frequency can then be read directly from the digital display for the generator.

CALIBRATION
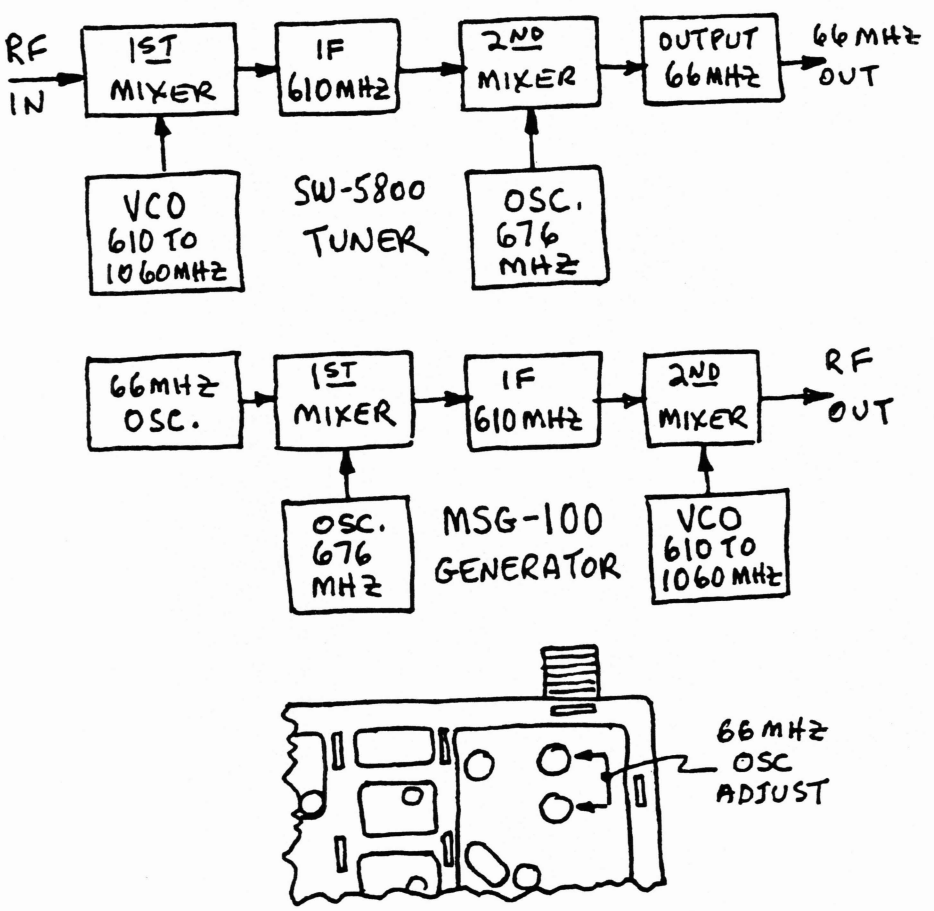
A comparison of the block diagrams of the SW-5800 tuner and the MSG-100 generator shows us how the modifications have made one the opposite of the other. The tuner accepts a wide range of input signal frequencies and converts them to 66 MHz, while the generator takes 66 MHz and converts it into a wide range of output frequencies. Since we start out with a 66 MHz oscillator and mix it up and down to produce the output frequency, it's actual frequency effects the generator's output frequency. Calibration of the generator is accomplished by adjusting either one of two inductors in the 66 MHz oscillator circuit. A small hex alignment tool can be used to adjust the cores which are accessible through the two holes indicated in the drawing. It is important to remember that the SW-6007 Digital Frequency Readout is actually displaying the frequency of the VCO, offset by the 610 MHz IF. This is an indirect display of the RF signal generated. It is correct only if the 66 MHz signal is correct. Tuning the 66 MHz oscillator does not change the VCO frequency display. It does affect the RF signal output frequency. When we calibrate the generator by tuning the 66 MHz oscillator, we are adjusting the RF output frequency to match the display, rather than the other way around,